HEIDENHAIN

TNC 620

The Compact Contouring Control for Milling, Drilling, and Boring Machines

Information for Machine Manufacturers

06/2024

TNC contouring control
General information

TNC 620

- Compact contouring control for **milling, drilling, and boring machines**
- Axes: 8 control loops, of which up to 2 can be configured as spindles
- For operation with HEIDENHAIN inverter systems and ideally HEIDENHAIN motors
- Fully digital with HSCI interface and EnDat interface
- Compact size
- CFR CompactFlash memory card (CFast)
- Programming in HEIDENHAIN Klartext format or G-code (ISO)
- Standard milling, drilling, and boring cycles
- Touch probe cycles
- Short block processing time (1.5 ms)

19-inch screen (portrait) design

- Monitor, keyboard, and main computer in one unit (MC 8410)
- Integration of the keyboard in the lower screen area
- Multi-touch operation

15-inch screen (landscape) design

- Monitor and main computer in one unit (MC 8420)
- Separate keyboard unit
- Multi-touch operation

System test

Controls, power modules, motors, and encoders from HEIDENHAIN are usually integrated as components into complete systems. In such cases, comprehensive testing of the complete system is required, irrespective of the specifications of the individual devices.

Parts subject to wear

Controls from HEIDENHAIN contain parts subject to wear, such as a backup battery and fan.

Standards

Standards (ISO, EN, etc.) apply only where explicitly stated in the brochure.

Note

Intel, Intel Xeon, Core, and Celeron are registered trademarks of Intel Corporation.

Validity

The features and specifications described here apply to the following control and NC software versions:

TNC 620 with NC software versions
817600-18 (requires an export license in accordance with Annex I of the EU Dual-Use Regulation)
817601-18 (not covered by Annex I of the EU Dual-Use Regulation)

This brochure supersedes all previous editions, which thereby become invalid. **Subject to change without notice.**

Requirements

Some of these specifications require particular machine configurations. Please also note that, for some functions, a special PLC program must be created by the manufacturer.

Starting with version 81760x-18, the NC software can be installed only in a storage medium with ≥ 30 GB of nominal capacity. Smaller storage media can no longer be used. In addition, the main computer (MC) must be equipped with at least 4 GB of main memory.

Contents

Please note the page references in the tables with the specifications.

Functional safety (FS)

If no explicit distinction is made between standard and FS components (FS = functional safety) then the data and other information apply to both versions (e.g., TE 735, TE 735 FS).

Components for which there is also a version with functional safety bear the identifier "(FS)" at the end of the product designation (e.g., UEC 3xx (FS)).

Use of this brochure

This brochure is purely a decision-making aid for selecting HEIDENHAIN components. Further documents are required for actual project planning (see "Technical documentation", Page 103).

Overview tables

Components

Control systems		TNC 620		Page
Main computer		**MC 8410**	**MC 8420**	16
Storage medium		**CFR (CFast)** memory card		18
NC software license		On **SIK component**		18
Multi-touch display		19-inch screen (portrait, 1024 x 1280 pixels)	15-inch screen (landscape, 1024 x 768 pixels)	
Keyboard		Integrated in screen	TE 73x or TE 73x FS	20
Machine operating panel		**PLB 6001, PLB 600x FS** (HSCI adapter for OEM machine operating panel)		20
		MB 721, MB 721 FS	**MB 720, MB 720 FS**	23
PLC inputs/ outputs[1]	With HSCI interface	**PL 6000** consisting of PLB 62xx basic module (system PL) or PLB 61xx (expansion PL) and I/O modules		21
		On UEC and UMC		
Additional modules[1]		**CMA-H** for analog axes/spindles in the HSCI system		24
		Modules for fieldbus systems		
Inverter systems[2]		Compact inverters and modular inverters		
Connecting cables		✓		38

[1] May be necessary depending on the configuration
[2] For more information, refer to the *Inverter Systems for Gen 3 Drives* brochure

Please note: The MC main computer does not have any PLC inputs/outputs. Therefore one PL 6000, UEC, or UMC is necessary for each control. They feature safety-relevant inputs/outputs as well as the connections for touch probes.

Accessories

Accessory	TNC 620	Page
Electronic handwheels	• **HR 510, HR 510 FS** portable handwheel • **HR 520, HR 520 FS** portable handwheel with display • **HR 550 FS** portable wireless handwheel with display • **HR 130** panel-mounted handwheel • Up to three **HR 180** panel-mounted handwheels via HRA 180 handwheel adapter	25
Workpiece touch probes[1]	• **TS 460, TS 760** triggering touch probes with radio or infrared transmission • **TS 260, TS 750, TS 150** triggering touch probes with cable connection	
Tool touch probes[1]	• **TT 160** triggering touch probe with cable connection • **TT 460** triggering touch probe with radio or infrared transmission	
Programming station[2]	Control software for PCs for programming, archiving, and training • Single-station license with original control operating panel • Single-station license with operation via virtual keyboard • Network license with operation via virtual keyboard • Demo version with virtual keyboard or PC keyboard—free of charge	
Auxiliary axis control	**PNC 610**	31
Industrial PC	**ITC 855** **IPC 306** industrial PC for Windows **IPC 6490/IPC 8420** industrial PC for PNC 610	29
Snap-on keys	For controls and handwheels	34

[1] For more information, refer to the *Touch Probes* brochure
[2] For more information, refer to the *Programming Station for TNC Controls* brochure

Software tools	TNC 620	Page
PLCdesign[1]	PLC development software	73
KinematicsDesign[1]	Software for creation of kinematic models	65
TNCremo[2], **TNCremoPlus**[2][3]	Data transfer software (TNCremoPlus with "live" screen)	78
ConfigDesign[1]	Software for configuring the machine parameters	68
CycleDesign[1]	Software for creating cycle structures	76
TNCkeygen[1]	Software for enabling SIK options for a limited time, and for single-day access to the OEM area	18
TNCscope[1]	Software for data recording	69
TNCopt[1]	Software for putting digital control loops into service	69
IOconfig[1]	Software for configuring PLC I/O and fieldbus components	22
RemoteAccess[1][3]	Software for remote diagnostics, monitoring, and operation	70
RemoTools SDK[1]	Function library for developing customized applications for communication with HEIDENHAIN controls	79
TNCtest[1]	Software for creation and execution of an acceptance test	71
TNCanalyzer[1]	Software for the analysis and evaluation of service files	71

[1] Available to registered customers for download from the Internet
[2] Available to all customers (without registration) for download from the Internet
[3] Software release module required

Specifications

Specifications	TNC 620	Page
Axes	8 control loops, of which up to 2 can be configured as spindles	51
Rotary axes	✓	
Synchronized axes	✓	
PLC axes	✓	
Main spindle	*Milling:* max. 2; second spindle can be controlled by PLC alternately with the first	54
Speed	Max. 60 000 rpm for motors with a single pole pair (with software option 49: max. 120 000 rpm)	54
Operating mode switchover	✓	54
Position-controlled spindle	✓	54
Oriented spindle stop	✓	54
Gear shifting	✓	54
NC program memory	≈ 7.7 GiB	16
Input resolution and display step		51
Linear axes	Down to 0.01 µm	
Rotary axes	Down to 0.000 01°	
Functional safety (FS)	With FS components, SPLC and SKERN	47
For applications with up to	• SIL 2 as per EN 61508 • Category 3, PL d as per EN ISO 13849-1: 2008	
Interpolation		
Straight line	In 4 axes; in max. 5 axes with software option 9	
Circle	In 2 axes; in 3 axes with software option 8	
Helical	✓	
Axis feedback control		56
With servo lag	✓	
With feedforward	✓	
Axis clamping	✓	51
Maximum feed rate	$\frac{60000\ \text{rpm}}{\text{No. of motor pole pairs}} \cdot \text{Screw pitch [mm]}$ Applies to f_{PWM} = 5000 Hz	51

Specifications	TNC 620		Page
Cycle times of main computer	**MC**		57
Block processing	< 1.5 ms		58
Cycle times of controller unit	**CC/UEC/UMC**		57
Path interpolation	3 ms		57
Fine interpolation	Applies to f_{PWM} = 5 kHz	*Single-speed:* 0.2 ms *Double-speed:* 0.1 ms (software option 49)	
Position controller			
Speed controller			
Current controller	f_{PWM} 3333 Hz 4000 Hz 5000 Hz 6666 Hz with software option 49 8 000 Hz with software option 49 10 000 Hz with software option 49 13 333 Hz with software option 49 16 000 Hz with software option 49	T_{INT} 150 µs 125 µs 100 µs 75 µs with software option 49 62.5 µs with software option 49 50 µs with software option 49 37.5 µs with software option 49 31.25 µs with software option 49	
Permissible temperature range	Operation: In electrical cabinet: 5 °C to 40 °C In operating panel: 0 °C to 50 °C Storage: –20 °C to 60 °C		

Interfacing to the machine

Interfacing to the machine	TNC 620	Page
Error compensation	✓	66
Linear axis error	✓	66
Nonlinear axis error	✓	66
Backlash	✓	66
Reversal spikes during circular movement	✓	66
Hysteresis	✓	66
Thermal expansion	✓	66
Static friction	✓	66
Sliding friction	✓	66
Dynamic compliance during acceleration phases	✓	62
Integrated PLC	✓	72
Program format	List of commands	72
Program input at the control	*MC 8410:* via screen keyboard *MC 8420:* via TE 73x or TE 73x FS	72
Program input by PC	✓	72
Symbolic PLC-NC interface	✓	72
PLC memory	≈ 4 GiB	72
PLC cycle time	9 ms to 30 ms (adjustable)	72
PLC inputs/outputs	For the maximum configuration of the PLC system, see Page 46	45
PLC inputs, DC 24 V	Via PL, UEC, UMC	21
PLC outputs, DC 24 V	Via PL, UEC, UMC	21
Analog inputs ±10 V	Via PL	21
Inputs for PT 100 thermistors	Via PL	21
Analog outputs ±10 V	Via PL	21
PLC functions	✓	72
Small PLC window	✓	73
PLC soft keys	✓	73
PLC positioning	✓	73
PLC Basic Program	✓	75
Integration of applications		74
High-level language programming	Use of the Python programming language in conjunction with the PLC (software option 46)	74
User interfaces can be custom-designed	Creation of individualized user interfaces by the machine manufacturer with the Python programming language with Qt/QML. Programs up to a memory limit of 10 MB are enabled in standard mode. More can be enabled via software option 46.	74

Interfacing to the machine	TNC 620	Page
Setup and diagnostic aids		68
TNCdiag	Software for the analysis of status and diagnostic information of digital drive systems	68
TNCopt	Software for putting digital control loops into service	69
ConfigDesign	Software for creating the machine configuration	68
KinematicsDesign	Software for creating the machine kinematics, initialization of DCM	65
Integrated oscilloscope	✓	68
Trace function	✓	69
API DATA function	✓	69
Table function	✓	69
OLM (online monitor)	✓	69
Log	✓	69
TNCscope	✓	69
Bus diagnostics	✓	71
Data interfaces	✓	
Ethernet	✓	77
USB	✓	77
Protocols		77
Standard data transmission	✓	77
Blockwise data transfer	✓	77

Functions for the user

Function	Standard	Option	TNC 620
Short description	✓		Basic version: 3 axes plus closed-loop spindle (standard)
		0-3	Up to 8 control loops, of which 2 can be configured as spindles
		77	
	✓		Digital current and speed control
Program entry	✓		HEIDENHAIN Klartext
	✓		ISO programming
		42	Direct loading of contours or machining positions from DXF files and saving as a Klartext contouring program or as a point table
Position values	✓		Nominal positions for lines and arcs in Cartesian coordinates or polar coordinates
	✓		Incremental or absolute dimensions
	✓		Display and entry in mm or inches
Tool compensation	✓		Tool radius in the working plane, and tool length
		21	Radius compensated contour look ahead for up to 99 blocks (M120)
		9	Three-dimensional tool-radius compensation for changing tool data without having to recalculate an existing program
Tool tables	✓		Multiple tool tables with any number of tools
Cutting data	✓		Automatic calculation of spindle speed, cutting speed, feed per tooth, and feed per revolution
Constant contour speed	✓		Based on the path of the tool center point
	✓		Based on the tool's cutting edge
Parallel operation	✓		Creating a program with graphical support while another program is being run
3D machining	✓		Motion control with smoothed jerk
		9	3D tool compensation via surface-normal vectors
		9	Changing the tilt position with handwheel superimpositioning; maintaining the position of the tool point (TCPM)
		9	Keeping the tool normal to the contour
		9	Tool radius compensation normal to the tool direction
		9	Manual traverse in the active tool-axis system
Rotary table machining		8	Programming of contours on an unrolled cylinder surface
		8	Feed rate in mm/min
Contour elements	✓		Straight line
	✓		Chamfer
	✓		Circular path
	✓		Circle center
	✓		Circle radius
	✓		Tangentially connecting circular arc
	✓		Corner rounding
Contour approach and departure	✓		Via straight line: tangential or perpendicular
	✓		Via circular arc
FK free contour programming		19	FK free contour programming in HEIDENHAIN Klartext format with graphical support for workpiece drawings not dimensioned for NC

Function	Standard	Option	TNC 620
Fixed cycles	✓		Drilling, conventional and rigid tapping, rectangular and circular pockets
		19	Peck drilling, reaming, boring, counterboring, centering
		19	Milling of internal and external threads
		19	Clearing level and oblique surfaces
		19	Multi-operation machining of straight and circular slots
		19	Multi-operation machining of rectangular and circular pockets, and rectangular and circular studs
		19	Cartesian and polar point patterns
		19	Contour train, contour pocket
		19	Contour slot with trochoidal milling
		19	Engraving cycle: engrave text or numbers in a straight line or on an arc
		19	OEM cycles (special cycles developed by the machine manufacturer) can be integrated
Program jumps	✓		Subprograms
	✓		Program-section repeat
	✓		Any program as a subprogram
Coordinate transformations	✓	8	Shifting, rotating, mirroring, scaling (axis-specific)
			Tilting the working plane, PLANE function
Q parameters Programming with variables	✓		Mathematical functions: =, +, –, *, /, sin α, cos α, tan α, arc sin, arc cos, arc tan, a^n, e^n, ln, log, angle α from sin α and cos α, square root of a, square root of ($a^2 + b^2$)
	✓		Logical operations (=, = /, <, >)
	✓		Calculating with parentheses
	✓		Absolute value of a number, constant π, negation, truncation of digits before or after the decimal point
	✓		Functions for calculation of circles
	✓		Functions for text processing
Programming aids	✓		Calculator
	✓		Complete list of all current error messages
	✓		Context-sensitive help function for error messages
	✓		TNCguide: the integrated help system; user information is available directly on the TNC
	✓		Graphical support for the programming of cycles
	✓		Comment and structure blocks in the NC program
CAD viewer	✓		Display of standardized CAD file formats on the TNC
CAD Model Optimizer		152	Optimize CAD models
Teach-in	✓		Application of actual positions directly in the NC program
Test graphics Depictions		20	Graphical simulation of the machining sequence, even while another program is running
		20	Plan view / projection in 3 planes / 3D view, including in tilted working plane / 3D line graphics
		20	Detail zoom
Programming graphics	✓		In the Programming and Editing mode, the contours of entered NC blocks are rendered (2D pencil-trace graphics), even while another NC program is running
Program-run graphics		20	Graphic simulation during real-time machining
Display modes		20	Plan view / projection in 3 planes / 3D view
Machining time	✓		Calculation of machining time in the Test Run mode of operation
	✓		Display of the current machining time in the Program Run operating modes
Returning to the contour	✓		Mid-program startup in any block in the program, returning the tool to the calculated nominal position to continue machining
	✓		Program interruption, contour departure and return

Function	Standard	Option	TNC 620
Preset management	✓		For storing any presets
Datum tables	✓		Multiple datum tables for storing workpiece-specific datums
Pallet tables	✓		Workpiece-oriented execution of pallet tables (with any number of entries for the selection of pallets, NC programs, and datums)
Touch probe cycles		17 17 17 17	Touch probe calibration Manual or automatic compensation of workpiece misalignment Manual or automatic preset setting Automatic tool and workpiece measurement
Parallel secondary axes	✓ ✓ ✓		Compensation of movement in the secondary axes U, V, W through the principal axes X, Y, Z Movements of parallel axes included in the position display of the associated principal axis (sum display) Defining the principal and secondary axes in the NC program enables execution on different machine configurations
Conversational languages	✓		English, German, Czech, French, Italian, Spanish, Portuguese, Dutch, Swedish, Danish, Finnish, Norwegian, Slovenian, Slovak, Polish, Hungarian, Russian (Cyrillic), Romanian, Turkish, Chinese (traditional and simplified), Korean

Software options

Option number	Software option	With NC software 817600-817601- and later	ID	Comment	Page
0	Additional Axis 1	01	354540-01	Additional control loop 1	19
1	Additional Axis 2	01	353904-01	Additional control loop 2	19
2	Additional Axis 3	01	353905-01	Additional control loop 3	19
3	Additional Axis 4	01	367867-01	Additional control loop 4	19
8	Adv. Function Set 1	01	617920-01	Rotary table machining • Programming of cylindrical contours as if in two axes • Feed rate in mm/min	51
				Coordinate transformations • Tilting the working plane, PLANE function	52
				Interpolation • Circular in 3 axes with tilted working plane	
9	Adv. Function Set 2	01	617921-01	3D machining • 3D tool compensation via surface-normal vectors • Using the electronic handwheel to change the angle of the swivel head during program run without affecting the position of the tool point (TCPM = Tool Center Point Management) • Keeping the tool perpendicular to the contour • Tool radius compensation perpendicular to the tool direction • Manual traverse in the active tool-axis system Interpolation • Straight line in more than four axes (requires an export license in accordance with Annex I of the EU Dual-Use Regulation)	52
17	Touch Probe Functions	01	634063-01	Touch probe cycles • Workpiece misalignment compensation, preset setting • Automatic tool and workpiece measurement • Touch probe input enabled for non-HEIDENHAIN systems • Automatically enabled upon connection of an SE 661	76
18	HEIDENHAIN DNC	01	526451-01	Communication with external PC applications over COM component	79

Option number	Software option	With NC software 817600-817601- and later	ID	Comment	Page
19	Advanced Programming Features	01	628252-01	FK free contour programming Fixed cycles • Peck drilling, reaming, boring, counterboring, centering • Milling internal and external threads • Clearing level and oblique surfaces • Complete machining of straight and circular slots • Complete machining of rectangular and circular pockets • Circular and linear point patterns • Contour train, contour pocket, including contour-parallel machining • Contour slot with trochoidal milling • Special cycles developed by the machine manufacturer can be integrated	
20	Advanced Graphic Features	01	628253-01	Program-verification graphics, program-run graphics • Plan view, view in three planes, 3D view	
21	Adv. Function Set 3	01	628254-01	Tool compensation • Radius-compensated contour look-ahead for up to 99 blocks (LOOK AHEAD) 3D machining • Superimposing handwheel positioning during program run	
24	Gantry Axes	01	634621-01	Gantry axes via master-slave torque control	52
42	CAD Import	05	526450-01	Importing of contours from 2D and 3D models (e.g., STEP, IGES, DXF)	
46	Python OEM Process	01	579650-01	Execution of Python applications	74
48	KinematicsOpt	01	630916-01	Touch-probe cycles for the automatic measurement of rotary axes	67
49	Double-Speed Axes	01	632223-01	Short control-loop cycle times for direct drives	57
56–61	OPC UA NC Server 1 to 6	08	1291434-01 to 1291434-06	Connection of an OPC UA application	80
77	4 Additional Axes	01	634613-01	Four additional control loops	19
93	Extended Tool Management	02	676938-01	Expanded tool management: • Tooling list (list of all tools of the NC program) • T usage sequence (sequence of all tools inserted during the program)	
133	Remote Desk. Manager	01	894423-01	Display and operation of external computer units (e.g., Windows PC)	79
141	Cross Talk Comp.	01	800542-01	CTC: compensation of axis couplings	62
142	Pos. Adapt. Control	01	800544-01	PAC: position-dependent adaptation of control parameters	63
143	Load Adapt. Control	01	800545-01	LAC: load-dependent adaptation of control parameters	61
144	Motion Adapt. Control	01	800546-01	MAC: motion-dependent adaptation of control parameters	62
145	Active Chatter Control	01	800547-01	ACC: active chatter control	59

Option number	Software option	With NC software 817600-817601- and later	ID	Comment	Page
146	Machine Vibration Control	08	800548-01	Damping of machine oscillations to improve workpiece surfaces. The following functions are part of Machine Vibration Control (MVC): • AVD (Active Vibration Damping): Active damping of vibrations in the control loop • FSC (Frequency Shaping Control): Reduction of vibration inducement by means of frequency-based feedforward control	63
152	CAD Model Optimizer	17	1353918-01	Conversion and optimization of CAD models • Fixtures • Workpiece blank • Finished part	65
154	Batch Process Manager	05	1219521-01	Planning and executing multiple production jobs	53
155	Component Monitoring	06	1226833-01	Monitoring for component overloading and wear	65
160	Integrated FS: Basic	07	1249928-01	Enables functional safety and four safe control loops	47
161	Integrated FS: Full	07	1249929-01	Enables functional safety and the maximum number of safe control loops	47
162	Add. FS Ctrl. Loop 1	07	1249930-01	Additional control loop 1	47
163	Add. FS Ctrl. Loop 2	07	1249931-01	Additional control loop 2	47
164	Add. FS Ctrl. Loop 3	07	1249932-01	Additional control loop 3	47
165	Add. FS Ctrl. Loop 4	07	1249933-01	Additional control loop 4	47
166	Add. FS Ctrl. Loop 5	07	1249934-01	Additional control loop 5	47
167	Optimized Contour Milling	07	1289547-01	OCM: optimize roughing processes and fully utilize milling tools with the integrated cutting data calculator	60
169	Add. FS Full	08	1319091-01	Enables all FS axis options or control loops. Options 160 and 162 to 166 must already be set.	47

HSCI control components
Main computers

Main computer

The MC main computers feature the following:
- Intel Celeron 1047 processor (1.4 GHz, dual-core)
- Main memory: 4 GB RAM
- IP54 degree of protection (when installed)
- HSCI interface to the controller unit and to other control components

To be ordered separately and installed in the main computer by the OEM:
- **CFR (CFast)** memory card with the NC software
- The **System Identification Key** (SIK) component for enabling control loops and software options

Special features of the MC 8410:
- 19-inch screen (portrait); resolution: 1024 x 1280 pixels
- Without feed-rate and spindle-speed potentiometers (potentiometers are integrated in the MB 721)
- Multi-touch operation and virtual ASCII keyboard
- Software support with 81760x-04 SP2 and later

Special features of the MC 8420:
- 15-inch screen (landscape), resolution: 1024 x 768 pixels
- Multi-touch operation
- Separate TE keyboard unit required
- Software support with 81760x-08 and later

The following HSCI components are necessary for operation of the TNC 620:
- MC main computer and controller unit
- **PLB 62xx** PLC I/O unit (system PL; integrated in UxC))
- **MB 72x** or **MB 72x FS** machine operating panel (integrated in TE 735 or TE 735 FS) or **PLB 6001** or **PLB 600x FS** HSCI adapter for connecting an OEM machine operating panel

Interfaces

The MC is equipped with USB 3.0 and Ethernet ports. Connection to PROFIBUS DP or PROFINET IO is optionally possible via the individual additional modules or a combined PROFIBUS DP / PROFINET IO module.

Export license

The main computer is not covered by Annex I of the EU Dual-Use Regulation. Only the easily replaceable storage medium might require an export license in accordance with Annex I of the EU Dual-Use Regulation, depending on the software version.

Gen 3 labels

The different Gen 3 labels identify how control components can be deployed.

The label indicates that a component is ready for operation in a Gen 3 (Gbit HSCI) drive system. Whether a component is suitable for functional safety FS (integrated FS, external FS, enabling of FS) must be considered separately.

Gen 3 ready

Gen 3 ready: These components can be used in systems with Gen 3 drives (UVR 3xx, UM 3xx, CC 3xx) and in systems with a 1xx inverter system (UVR 1xx, UE 2xx, UR 2xx, CC 61xx).

Gen 3 exclusive

Gen 3 exclusive: These components can be used only in systems with Gen 3 drives (UVR 3xx, UM 3xx, CC 3xx).

Versions

The main computers are designed for direct installation in the operating panel:
- **Integrated** keyboard:
  The MC 8410 features a 19-inch multi-touch display (portrait) with TNC keyboard and ASCII keyboard integrated in the screen
- **Separate** keyboard:
  The MC 8420 features a 15-inch multi-touch display (landscape). A separate 15-inch TNC keyboard is required. Hence, the entire ASCII character set is available.

The MC 8410 main computer is supported starting with NC software 81760x-04 SP2 and later; the MC 8420 main computer is supported starting with NC software 81760x-08 and later. Earlier software versions will not run on these MC main computers.

MC 8420

MC 8410

	Installation type	Storage medium	Processor	RAM	Power consumption*)	Mass	ID
MC 8410[1)]	Operating panel (19-inch, portrait)	CFR (30 GB)	Intel Celeron 1047 1.4 GHz, dual-core	4 GB	≈ 53 W	≈ 8.8 kg	1175057-xx
MC 8420[1)]	Operating panel (15-inch)	CFR (30 GB)	Intel Celeron 1047 1.4 GHz, dual-core	4 GB	≈ 52 W	≈ 6.6 kg	1318472-xx

*) Test conditions: Windows 7 (64-bit) operating system, 100% processor load, interfaces not loaded, no fieldbus module
1) Fulfills IP54 when installed

Software options

Software options allow the performance of the TNC 620 to be adapted to one's actual needs at a later time. The software options are described on page 13. They are enabled by entering keywords based on the SIK number, and are saved in the SIK component. Please provide the SIK number when ordering new options.

Storage medium

The storage medium is a CFR (CFast) memory card. It contains the NC software and is used to store NC and PLC programs. The storage medium is removable and must be ordered separately from the main computer.

This CFR uses the fast SATA protocol (CFast). This CFR is compatible with the MCs described in the **Main computers** section.

CompactFlash CFR (CFast)

CompactFlash CFR (CFast) 30 GB	
Free PLC memory space	≈ 4 GiB
Free NC memory space	≈ 7.7 GiB
Requires an export license in accordance with Annex I of the EU Dual-Use Regulation (NC-SW 817600-18)	ID 1069906-18
Not covered by Annex I of the EU Dual-Use Regulation (NC SW 817601-18)	ID 1069906-68

SIK component

The SIK component contains the **NC software license** for enabling control loops and software options. It provides the main computer with an unambiguous ID code—the SIK number. The SIK component is ordered and shipped separately. It must be inserted into a slot provided for it in the MC main computer.

SIK component

The SIK component with the NC software license exists in different versions based on the enabled control loops and software options. Additional control loops can be enabled later by entering a keyword. HEIDENHAIN provides the keyword, which is based on the SIK number.

When ordering, please provide the SIK number of your control.

When the keywords are entered in the control, they are saved in the SIK component, thereby enabling and activating the software options. Should servicing become necessary, the SIK component must be inserted into the replacement control in order to enable all of the required software options.

Master keyword (general key)

For putting the TNC 620 into service, there is a master keyword that enables all software options once for 90 days. After this period, the software options can be activated only with the correct keywords. The general key is activated via a soft key.

TNCkeygen (accessory)

TNCkeygen is a collection of PC software tools for generating enabling keys for HEIDENHAIN controls for a limited period of time.

With the **OEM Key Generator**, you can generate enabling keys for software options by entering the SIK number, the software option to be enabled, the enabling period, and an OEM-specific password. This activation is limited to a period of 10 to 90 days. Each software option can be enabled only once; this is performed independently of the master keyword.

The **OEM daily key generator** generates an enabling key for the protected OEM area, thus granting the user access on the day it is generated.

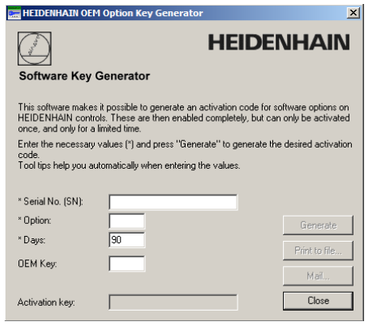

NC software license and enabling of control loops

Control loops	Without option	Incl. options 19 and 20	Incl. options 17, 19 and 20	Incl. options 19, 20 and 46	Incl. options 8, 19 and 20
4	ID 526924-01 *ID 526924-51*	ID 526924-04 *ID 526924-54*	ID 526924-20 *ID 526924-70*	ID 526924-11 *ID 526924-61*	ID 526924-18 *ID 526924-68*
5	ID 526924-02 *ID 526924-52*	ID 526924-05 *ID 526924-55*	- -	ID 526924-12 *ID 526924-62*	ID 526924-13 *ID 526924-63*
6	ID 526924-03 *ID 526924-53*	ID 526924-06 *ID 526924-56*	- -	ID 526924-19 *ID 526924-69*	ID 526924-07 *ID 526924-57*

Italicized: Not covered by Annex I of the EU Dual-Use Regulation

Not italicized: Requires an export license in accordance with Annex I of the EU Dual-Use Regulation

Enabling further control loops

Additional control loops can be enabled individually.
Up to **8 control loops** are possible.

Control-loop groups	Software option	
4 Additional Control Loops	77	ID 634613-01

Individual control loops	Option	
1st additional control loop	0	ID 354540-01
2nd additional control loop	1	ID 353904-01
3rd additional control loop	2	ID 353905-01
4th additional control loop	3	ID 367867-01

Keyboard units and machine operating panels

MB 720 machine operating panel

Gen 3 ready

- Suitable for the MC 8420
- Supply voltage: DC 24 V/≈ 4 W
- 36 exchangeable snap-on keys with status LED, freely definable via PLC (assignment as per PLC basic program: 12 axis keys, spindle start, spindle stop, 22 further function keys)
- Further operating elements: NC start[1], NC stop[1], emergency stop button, control voltage on[1], two holes for additional keys or keylock switches
- HSCI interface
- MB 720: 8 free PLC inputs and 8 free PLC outputs
  MB 720 FS: 4 free FS inputs and 8 free PLC outputs; additional dual-channel FS inputs for emergency stop and permissive buttons of the handwheel.

[1] Illuminated keys, addressable via PLC

MB 720	ID 784803-xx
MB 720 FS	ID 805474-xx
Mass	≈ 1.3 kg

MB 720

MB 721 machine operating panel

Gen 3 ready

Same as the MB 720, except:
- Suitable for the MC 8410
- Changed front panel
- 3 holes for additional buttons or keylock switches
- Spindle-speed and feed-rate override potentiometers
- USB port with cover cap

MB 721	ID 1164974-xx
MB 721 FS	ID 1164975-xx
Mass	≈ 1.5 kg

MB 721

TE 730 keyboard unit

Gen 3 ready

- Suitable for the MC 8420
- Axis keys
- The keys for axes IV and V are exchangeable snap-on keys
- Contouring keys
- Operating mode keys
- ASCII keyboard
- Spindle-speed and feed-rate override potentiometers
- USB interface to the MC main computer
- Touchpad

TE 730	ID 805489-xx
Mass	≈ 2.4 kg

TE 730

TE 735 keyboard unit (with a machine operating panel)

Gen 3 ready

- Suitable for the MC 8420
- NC keyboard same as TE 730
- USB interface to the MC main computer
- Machine operating panel (same as MB 720)
- HSCI interface

TE 735	ID 771898-xx
TE 735 FS	ID 805493-xx
Mass	≈ 3.7 kg

TE 735

PL 6000 PLC input/output systems with HSCI

PL 6000

The PLC inputs and outputs are available via external modular PL 6000 PLC input/output systems. They consist of a basic module and one or more input/output modules. A total maximum of 1000 inputs/outputs is supported. The PL 6000 units are connected to the MC main computer via the HSCI interface. The PL 6000 units are configured with the IOconfig PC software.

PLB 62xx

Basic modules

Basic modules with an **HSCI interface** exist for 4, 6, 8, and 10 modules. Standard NS 35 rails (DIN 46227 or EN 50022) are used for fastening.

Supply voltage	DC 24 V
Power consumption[1]	≈ 48 W at DC 24 V NC ≈ 21 W at DC 24 V PLC
Mass	≈ 0.65 kg to 1 kg (depending on the version)

[1] PLB 6xxx completely filled, incl. TS, TT

System PL with EnDat support

- Required once for each control system (except with UxC)
- Connections for TS and TT touch probes
- TS and TT touch probes with EnDat interface are supported
- *Without FS*: 12 free inputs, 7 free outputs
  With FS: 6 free FS inputs, 2 free FS outputs
- Functional safety (FS) is enabled via SIK options 160 to 166. Subsequent enabling of all FS control loops is via SIK option 169.
- Slots are equipped with cover strips

Gen 3 ready

PLB 6204	For 4 I/O modules	ID 1129809-xx
PLB 6206	For 6 I/O modules	ID 1129812-xx
PLB 6208	For 8 I/O modules	ID 1129813-xx
PLB 6210	For 10 I/O modules	ID 1278136-xx

Gen 3 exclusive

PLB 6204 FS	For 4 I/O modules	ID 1223032-xx
PLB 6206 FS	For 6 I/O modules	ID 1223033-xx
PLB 6208 FS	For 8 I/O modules	ID 1223034-xx
PLB 6210 FS	For 10 I/O modules	ID 1290089-xx

Note about the "Gen 3 ready" label:
The label indicates that a component is ready for operation in a Gen 3 (Gbit HSCI) drive system. Whether a component is suitable for functional safety (integrated FS, external FS, enabling of FS) must be considered separately.

Expansion PL

Gen3 ready

For connection to the system PL to increase the number of PLC inputs/outputs

PLB 6104	For 4 I/O modules	ID 1129799-xx
PLB 6106	For 6 I/O modules	ID 1129803-xx
PLB 6108	For 8 I/O modules	ID 1129804-xx
PLB 6104 FS	For 4 I/O modules	ID 1129796-xx
PLB 6106 FS	For 6 I/O modules	ID 1129806-xx
PLB 6108 FS	For 8 I/O modules	ID 1129807-xx

Up to seven PLB 6xxx units can be connected to the control.

I/O modules

Gen3 ready

There are I/O modules with digital and analog inputs and outputs. For partially occupied basic modules, the unused slots must be occupied by an empty housing.

PLD-H 16-08-00	I/O module with 16 digital inputs and 8 digital outputs	ID 594243-xx
PLD-H 08-16-00	I/O module with 8 digital inputs and 16 digital outputs	ID 650891-xx
PLD-H 08-04-00 FS	I/O module with 8 digital FS inputs and 4 digital FS outputs	ID 598905-xx
PLD-H 04-08-00 FS	I/O module with 4 digital FS inputs and 8 digital FS outputs	ID 727219-xx
PLD-H 04-04-00 HSLS FS	I/O module with 4 digital FS inputs and 4 high-side/low-side FS outputs	ID 746706-xx
Total current	Outputs 0 to 7: ≤ 2 A per output (≤ 8 A simultaneously)	
Power output	Max. 200 W	
Mass	≈ 0.2 kg	
PLA-H 08-04-04	Analog module for PL 6xxx with • 8 analog inputs, ±10 V • 4 analog outputs, ±10 V • 4 analog inputs for PT 100 thermistors	ID 675572-xx
Mass	≈ 0.2 kg	

I/O module for axis enabling

Gen3 exclusive

Axis enabling module for external safety. In combination with the PLB 620x without FS.

PAE-H 08-00-01	I/O module for enabling 8 axis groups	ID 1203881-xx

IOconfig (accessory)

PC software for configuring HSCI and PROFIBUS components

Accessories

HSCI adapter for OEM machine operating panel

PLB 600x

Gen3 ready

The PLB 600x HSCI adapter is required in order to connect an OEM-specific machine operating panel to the TNC 620.

- HSCI interface
- Connection for HR handwheel
- Inputs and outputs for keys and key illumination
  - *PLB 6001*: Terminals for 72 PLC inputs / 40 PLC outputs
  - *PLB 6001 FS*: Terminals for 36 FS inputs / 40 PLC outputs
  - *PLB 6002 FS:* Terminals for 4 FS inputs, 64 PLC inputs, and 40 PLC outputs
- Screw fastening or top-hat-rail mounting
- Configuration of the PLC inputs/outputs with the IOconfig computer software

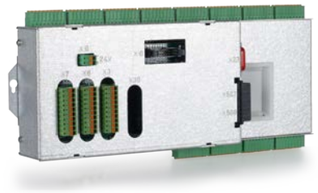

PLB 6001

PLB 6001	ID 668792-xx
PLB 6001 FS	ID 722083-xx
PLB 6002 FS	ID 1137000-xx
Mass	≈ 1.0 kg

Additional modules

Gen3 ready

Module for analog axes

Digital drive designs sometimes also require analog axes or spindles. The additional module CMA-H 04-04-00 (Controller Module Analog HSCI) makes it possible to integrate analog drive systems into an HSCI system.

The CMA-H is integrated into the HSCI control system via a slot on the underside of the CC or UEC. Every controller unit has slots for two boards. The CMA-H does not increase the total number of available axes: every analog axis used reduces the number of available digital control loops by one. Analog control loops also need to be enabled on the SIK. The analog control-loop outputs can be accessed only via the NC, not via the PLC.

Additional module for analog axes/spindles:
- Expansion board for the CC or UEC controller units
- 4 analog outputs, ±10 V for axes/spindle
- Spring-type plug-in terminals

CMA-H 04-04-00 ID 688721-xx

CMA-H 04-04-00

Fieldbus systems

An expansion board can be used to provide the TNC 620 with a PROFIBUS or PROFINET interface at any time. The modules are integrated into the control system through a slot on the MC. This makes the connection to an appropriate fieldbus system as a master possible. The interface is configured with IOconfig (version 3.0 or higher).

PROFIBUS DP module

- Expansion board for the MC main computer
- Connection for 9-pin D-sub connector (female) to X121

PROFIBUS-DP ID 828539-xx

PROFIBUS DP module

PROFINET IO module

- Expansion board for the MC main computer
- RJ45 connection at X621 and X622

PROFINET-IO ID 828541-xx

PROFINET IO module

Combined PROFIBUS DP/ PROFINET IO module

- Expansion board for the MC main computer
- RJ45 connection at X621 (PROFINET IO) and M12 connector at X121 (PROFIBUS DP)
- Additionally connectable terminating resistor for PROFIBUS DP with front LED

PROFIBUS-DP and PROFINET-IO ID 1160940-xx

Combined module

Electronic handwheels

Gen3 ready

Overview

The TNC 620 supports the use of electronic handwheels:
- **HR 550 FS** wireless handwheel or
- **HR 510, HR 510 FS** or **HR 520, HR 520 FS** portable handwheel or
- **HR 130** panel-mounted handwheel, or
- Up to three **HR 180** panel-mounted handwheels via the **HRA 180** adapter

Several handwheels can be operated on a single TNC 620:
- One handwheel via the handwheel input of the main computer
- One handwheel each on HSCI machine operating panels or PLB 6001 or PLB 600x FS HSCI adapters (for the maximum number possible, see Page 46)

The mixed operation of handwheels with and without display is not possible. Handwheels with functional safety (FS) are cross-circuit-proof due to special permissive-button logic.

HR 510

Portable electronic handwheel with:
- Keys for actual-position capture and the selection of five axes
- Keys for traverse direction and three preset feed rates
- Three keys for machine functions (see below)
- Emergency stop button and two permissive buttons (24 V)
- Magnetic holding pads

All keys are designed as snap-on keys and can be replaced with other symbols (see *Overview for the HR 510* in *Snap-on keys for the HR*).

Handwheel	Keys	Without detent	With detent
HR 510	NC start/stop, spindle start (for basic PLC program)	ID 1119971-xx	ID 1120313-xx
	FCT A, FCT B, FCT C	ID 1099897-xx	–
	Spindle right/left/ stop	ID 1184691-xx	–
HR 510 FS	NC start/stop, spindle start (for basic PLC program)	ID 1120311-xx	ID 1161281-xx
	FCT A, FCT B, FCT C	–	ID 1120314-xx
	Spindle start, FCT B, NC start	–	ID 1119974-xx

Mass ≈ 0.5 kg

HR 520

Portable electronic handwheel with
- Display for operating mode, actual position value, programmed feed rate, spindle speed, and error messages
- Override potentiometers for feed rate and spindle speed
- Selection of axes via keys or soft keys
- Actual position capture
- NC start/stop
- Spindle on/off
- Keys for continuous traverse of the axes
- Soft keys for machine functions of the machine manufacturer
- Emergency stop button

Handwheel	Without detent	With detent
HR 520	ID 670302-xx	ID 670303-xx
HR 520 FS	ID 670304-xx	ID 670305-xx
Holder	ID 591065-xx	

Mass ≈ 0.6 kg

HR 550 FS

Electronic handwheel with wireless transmission. Display, operating elements, and functions like HR 520

In addition:
- Functional safety (FS)
- Radio transmission range of up to 20 m (depending on environment)

Handwheel	Without detent	With detent
HR 550 FS	ID 1200495-xx	ID 1183021-xx
Replacement battery	ID 623166-xx	

Mass: 0.73 kg

HR 550 FS with HRA 551 FS

HRA 551 FS

Handwheel holder for HR 550 FS
- For docking the HR 550 FS on the machine
- Integrated battery charger for HR 550 FS
- Connections to the control and the machine
- Integrated transceiver
- HR 550 FS magnetically held to front of HRA 551 FS

Handwheel holder	
HRA 551 FS	ID 1119052-xx

Mass: 0.7 kg

For more information, see the *HR 550 FS* Product Information document.

Connecting cables

	HR 510	HR 510 FS	HR 520	HR 520 FS	HR 550 FS with HRA 551 FS	
Connecting cable (spiral cable) to HR (3 m)	–	–	✓	✓	–	ID 312879-01
	✓	✓	–	–	–	ID1117852-03
Connecting cable with metal armor	–	–	✓	✓	–	ID 296687-xx
	✓	✓	–	–	–	ID 1117855-xx
Connecting cable without metal armor	–	–	✓	✓	✓ (max. 2 m)	ID 296467-xx
	✓	✓	–	–	–	ID 1117853-xx
HR adapter cable to MC, straight connector	✓	✓	✓	✓	✓[1]	ID 1161072-xx
HR adapter cable to MC, angled connector (1 m)	✓	✓	✓	✓	✓[1]	ID 1218563-01
Extension cable to adapter cable	✓	✓	✓	✓	✓[1]	ID 281429-xx
Adapter cable for HRA to MC	–	–	–	–	✓[2]	ID 749368-xx
Extension cable to adapter cable	–	–	–	–	✓[2]	ID 749369-xx
Adapter connector for handwheels without functional safety	✓	–	✓	–	–	ID 271958-03
Adapter connector for handwheels with functional safety	–	✓	–	✓	✓	ID 271958-05

[1] For maximum cable lengths of up to 20 m between the MB and HRA 551 FS
[2] For maximum cable lengths of up to 50 m between the MB and HRA 551 FS

HR 130

Panel-mounted handwheel with ergonomic control knob and serial output signal. Like the other electronic handwheels, it is attached to the handwheel interface X23 either directly or via an extension cable.

Handwheel	Without detent	With detent
HR 130	ID 540940-03	ID 540940-01

Mass: ≈ 0.34 kg

HR 180

Panel-mounted handwheel with ergonomic control knob for connection to the HRA 180 handwheel adapter.

Handwheel	Without detent	With detent
HR 180	ID 540940-17	ID 540940-16

Mass: ≈ 0.36 kg

HRA 180

The HRA 180 handwheel adapter makes it possible to connect up to three HR 180 panel-mounted handwheels to the control's serial handwheel input at X23.

Handwheel adapter	
HRA 180	ID 1395422-xx

Mass: ≈ 0.7 kg

Industrial PCs/ITC

Gen3 ready

Additional operating station with touchscreen

The additional ITC operating stations (Industrial Thin Client) from HEIDENHAIN are convenient solutions for the additional, decentralized operation of the machine or of machine units such as tool-changing stations. The remote operation strategy, which is tailored to the TNC 620, makes it very easy to connect the ITC over a standard Ethernet connection with a cable length of up to 100 m. All ITCs fulfill IP54 when installed.

Connecting an ITC is very easy: as soon as the TNC 620 identifies an ITC, it provides it with a current operating system. After booting of the ITC, the complete content of the control's screen is mirrored 1:1 on the ITC's screen. As a result of this plug&play principle, no configuration by the machine manufacturer is necessary. With the standard configuration of the Ethernet interface at X116, the TNC 620 integrates the ITC into the system fully self-sufficiently.

ITC 855

The **ITC 855** is a compact additional operating station for control systems with a 15-inch or 19-inch main screen. Along with the ASCII keyboard and touchscreen it also has the most important function keys of the TNC 620. The ITC 855 adjusts its resolution automatically to fit the size of the main screen.

ITC 855		
	ID number	ID 1370459-xx
	Mass	≈ 6.4 kg
	Installation type	Operating panel
	Monitor	15-inch touchscreen (1024 x 768 pixels)
	Processor	Low-level
	RAM	2 GB
	Power consumption	≈ 35 W

IPC 306 for Windows

With the IPC 306 industrial PC, you can start and remotely operate Windows-based applications via the user interface of the TNC 620. The user interface is displayed on the control screen. Option 133 is required for this.

Since Windows runs on the industrial PC, it does not influence the NC machining process. The IPC is connected to the NC main computer via Ethernet. No second screen is necessary, since the Windows applications are displayed on the screen of the TNC 620 via remote accesses.

Along with the industrial PC, a separately orderable hard disk is required for operation. Windows 8, 10 or 11 can be installed on the empty data carrier as the operating system.

IPC 306

IPC 306	ID number	ID 1179966-xx
	Installation type	Electrical cabinet
	Mass	≈ 3.9 kg
	RAM	8 GB
	Processor	Intel high-level processor
	Power consumption	65 W
SSDR solid-state memory	ID number	ID 1282884-51
	Memory space	≈ 240 GB
HDMI adapter cable for initial setup		ID 1333118-01

Control of auxiliary axes

Gen3 ready

PNC 610

The PNC 610 auxiliary axis control is designed for controlling PLC axes independently of the TNC 620. The PNC 610 does not have an NC channel and thus cannot perform interpolating NC movements. With the IPC auxiliary computer, SIK, and CFR (CFast) storage medium, the PNC 610 is a separate HSCI system, which can be expanded with HEIDENHAIN inverters. In the standard version the PNC 610 already includes six PLC axis releases as well as software option 46 (Python OEM Process). The PLC basic program contains a Python interface for pallet management that is adaptable by the machine manufacturer.

The system's design is identical to that of the TNC 620. All relevant HEIDENHAIN tools and a basic program can be used. The position information can be transmitted over PROFIBUS DP (optional), PROFINET IO (optional), or TCP/IP (integrated, system is not capable of real-time), regardless of the platform.

PNC 610 with IPC 8420

Auxiliary computer

The IPC auxiliary computer features the following:
- Intel mid-level processor
- RAM main memory
- HSCI interface to the CC controller unit or to the UxC and to other control components
- USB 3.0 ports

The following components must be ordered separately by the OEM and installed in the auxiliary computer:
- CFR (CFast) memory card with the NC software
- System Identification Key component (SIK) for enabling software options

The following HSCI components are required for operating the PNC 610:
- IPC auxiliary computer
- Controller unit
- PLB 62xx PLC I/O unit (system PL; integrated into UxC)

Interfaces

USB 3.0 and Ethernet are available on the MC. Connection to PROFINET IO or PROFIBUS DP is possible via an additional module.

Design

IPC 6490	ID number	ID 1039541-xx
	Installation type	Electrical cabinet
	Mass	≈ 2.3 kg
	Power consumption	48 W
	RAM	2 GB
	Processor	Intel Celeron
IPC 8420	ID number	ID 1249510-xx
	Installation type	Operating panel (IP54 when installed)
	Mass	≈ 6.6 kg
	Power consumption	48 W
	Monitor	15.6-inch touchscreen (1366 x 768 pixels)
	RAM	2 GB
	Processor	Intel Celeron

Export license

The NC software of the PNC 610 is not covered by Annex I of the EU Dual-Use Regulation.

Software options

The performance of the PNC 610 can also be adapted to the actual requirements at a later time through software options. Software options are enabled and saved in the SIK component through the entry of keywords based on the SIK number. Please provide the SIK number when ordering new options.

Option number	Option	ID	Comment	Page
18	HEIDENHAIN DNC	526451-01	Communication with external PC applications over COM component	79
24	Gantry Axes	634621-01	Gantry axes via master-slave torque control	52
135	Synchronizing Functions	1085731-01	Advanced synchronization of axes and spindles	
141	Cross Talk Comp.	800542-01	CTC: compensation of axis couplings	62
142	Pos. Adapt. Control	800544-01	PAC: position-dependent adaptation of control parameters	63
143	Load Adapt. Control	800545-01	LAC: load-dependent adaptation of control parameters	61
144	Motion Adapt. Control	800546-01	MAC: motion-dependent adaptation of control parameters	62
160	Integrated FS: Basic	1249928-01	Enables functional safety and four safe control loops	47
161	Integrated FS: Full	1249929-01	Enables functional safety and the maximum number of safe control loops	47
162	Add. FS Ctrl. Loop 1	1249930-01	Additional control loop 1	47
163	Add. FS Ctrl. Loop 2	1249931-01	Additional control loop 2	47
164	Add. FS Ctrl. Loop 3	1249932-01	Additional control loop 3	47
165	Add. FS Ctrl. Loop 4	1249933-01	Additional control loop 4	47
166	Add. FS Ctrl. Loop 5	1249934-01	Additional control loop 5	47
169	Add. FS Full	1319091-01	Enabling of all FS axis options or control loops. Options 160 and 162 to 166 must already be set.	47

Storage medium

The storage medium is a CFR (CFast) memory card. It contains the NC software and must be ordered separately from the main computer. The NC software is based on the HEIDENHAIN HEROS 5 operating system.

CFR (CFast) 30 GB	ID 1102057-xx
Not covered by Annex I of the EU Dual-Use Regulation	
NC software	817591-xx
Free PLC memory space	4 GiB
Free NC memory space	7.7 GiB

SIK component

The SIK component holds the NC software license for enabling software options. It provides the main computer with an unambiguous ID code—the SIK number. The SIK component is ordered and shipped separately. It must be inserted into a special slot in the IPC auxiliary computer. The SIK component of the PNC can enable six axes. The enabling of up to the maximum number of ten axes must be performed via the UMC compact inverter.

SIK component for PNC 610 ID 617763-53

Snap-on keys for handwheels

Snap-on keys

The snap-on keys make it easy to replace the key symbols. In this way, the HR handwheel can be adapted to different requirements.

Overview for HR 520, HR 520 FS, and HR 550 FS

Axis keys
Orange

A	ID 330816-42	X	ID 330816-24	U	ID 330816-43	IV	ID 330816-37
B	ID 330816-26	Y	ID 330816-36	V	ID 330816-38		
C	ID 330816-23	Z	ID 330816-25	W	ID 330816-45		

Gray

A–	ID 330816-95	V+	ID 330816-69	X–	ID 330816-0W	Y+	ID 330816-0R
A+	ID 330816-96	W–	ID 330816-0G	X+	ID 330816-0V	Y–	ID 330816-0D
B–	ID 330816-97	W+	ID 330816-0H	X–	ID 330816-0N	Y+	ID 330816-0E
B+	ID 330816-98	IV–	ID 330816-71	X+	ID 330816-0M	Z–	ID 330816-65
C–	ID 330816-99	IV+	ID 330816-72	Y–	ID 330816-67	Z+	ID 330816-66
C+	ID 330816-0A	X–	ID 330816-63	Y+	ID 330816-68	Z–	ID 330816-19
U–	ID 330816-0B	X+	ID 330816-64	Y–	ID 330816-21	Z+	ID 330816-16
U+	ID 330816-0C	X–	ID 330816-18	Y+	ID 330816-20	Z–	ID 330816-0L
V–	ID 330816-70	X+	ID 330816-17	Y–	ID 330816-0P	Z+	ID 330816-0K

Machine functions

SPEC FCT	ID 330816-0X	FN 3	ID 330816-75		ID 330816-0T		ID 330816-86
SPEC FCT	Black ID 330816-1Y	FN 4	ID 330816-76		ID 330816-81		ID 330816-87
FCT A	Black ID 330816-30	FN 5	ID 330816-77		ID 330816-82		ID 330816-88
FCT B	Black ID 330816-31		ID 330816-78		ID 330816-83		ID 330816-94
FCT C	Black ID 330816-32		ID 330816-79		ID 330816-84		ID 330816-0U
FN 1	ID 330816-73		ID 330816-80		ID 330816-89		ID 330816-91
FN 2	ID 330816-74		ID 330816-0S		ID 330816-85		ID 330816-3L

Spindle functions

	Red ID 330816-08		ID 330816-40		Red ID 330816-47		ID 330816-48
	Green ID 330816-09		ID 330816-41		Green ID 330816-46		ID 385530-5X

Other keys

	Black ID 330816-01		Red ID 330816-50		ID 330816-90		ID 330816-93
	Gray ID 330816-61		ID 330816-33		Black ID 330816-27	0	ID 330816-0Y
NC I	Green ID 330816-11		ID 330816-34		Black ID 330816-28		Black ID 330816-4M
NC 0	Red ID 330816-12		ID 330816-13		Black ID 330816-29		ID 330816-3M
	Green ID 330816-49		Green ID 330816-22		ID 330816-92		ID 330816-3N

Overview for HR 510 and HR 510 FS

Axis keys
Orange

A	ID 1092562-02	X	ID 1092562-05	U	ID 1092562-36	IV	ID 1092562-08
B	ID 1092562-03	Y	ID 1092562-06	V	ID 1092562-09		
C	ID 1092562-04	Z	ID 1092562-07	W	ID 1092562-37		

Gray

X+	ID 1092562-28	Y–	ID 1092562-31	IV+	ID 1092562-24	V–	ID 1092562-27
X–	ID 1092562-29	Z+	ID 1092562-32	IV–	ID 1092562-25		
Y+	ID 1092562-30	Z–	ID 1092562-33	V+	ID 1092562-26		

Machine functions

FCT A	Black ID 1092562-14	FCT B	Black ID 1092562-15	FCT C	Black ID 1092562-16		ID 1092562-42
	ID 1092562-43		ID 1092562-44				

Spindle functions

	ID 1092562-18		ID 1092562-19		Green ID 1092562-22		Red ID 1092562-17
	Red ID 1092562-38		ID 1092562-41				

Other keys

	Black ID 1092562-01	NC I	Green ID 1092562-23		ID 1092562-13		ID 1092562-35
	Green ID 1092562-20		ID 1092562-11		Black ID 1092562-10		Gray ID 1092562-39
	Red ID 1092562-21		ID 1092562-12		ID 1092562-34		Orange ID 1092562-40

Snap-on keys for the control

Snap-on keys

The snap-on keys make it easy to replace the key symbols, thus allowing the keyboard to be adapted to different requirements.

Overview

Keys
Orange

V	ID 679843-31	A	ID 679843-54	X	ID 679843-C8	U	ID 679843-D4
IV	ID 679843-32	W	ID 679843-55	B	ID 679843-C9		
Z	ID 679843-53	C	ID 679843-88	Y	ID 679843-D3		

Gray

X+	ID 679843-03	VI+	ID 679843-13	Y′+	ID 679843-93	Z′+	ID 679843-B9
X–	ID 679843-04	VI–	ID 679843-14	Y′–	ID 679843-94	Z′–	ID 679843-C1
Y+	ID 679843-05	Y–	ID 679843-43	B–	ID 679843-B1	X′–	ID 679843-C2
Y–	ID 679843-06	Y+	ID 679843-44	B+	ID 679843-B2	X′+	ID 679843-C3
Z+	ID 679843-07	C+	ID 679843-67	U–	ID 679843-B3	X′+	ID 679843-C4
Z–	ID 679843-08	C–	ID 679843-68	U+	ID 679843-B4	X′–	ID 679843-C5
IV+	ID 679843-09	A+	ID 679843-69	Y′–	ID 679843-B5	X–	ID 679843-D9
IV–	ID 679843-10	A–	ID 679843-70	Y′+	ID 679843-B6	X+	ID 679843-E1
V+	ID 679843-11	Z+	ID 679843-91	W–	ID 679843-B7		
V–	ID 679843-12	Z–	ID 679843-92	W+	ID 679843-B8		

Machine functions

	ID 679843-01		ID 679843-30		ID 679843-74		ID 679843-C6
	ID 679843-02		ID 679843-40		ID 679843-76	FCT C	Black ID 679843-C7
	ID 679843-16		Green ID 679843-56	FCT A	Black ID 679843-95	SPEC FCT	ID 679843-D6
	ID 679843-22		Red ID 679843-57	FCT B	Black ID 679843-96		ID 679843-E3
	ID 679843-23	+	ID 679843-59		Black ID 679843-A1	FCT RC	ID 679843-E4
FN 1	ID 679843-24	–	ID 679843-60	FN 4	ID 679843-A2		ID 679843-E6
FN 2	ID 679843-25		ID 679843-61	FN 5	ID 679843-A3		ID 679843-E7
FN 3	ID 679843-26		ID 679843-62		ID 679843-A4		ID 679843-E8
	ID 679843-27	FCT	ID 679843-63		ID 679843-A5		
	ID 679843-28		ID 679843-64		ID 679843-A6		
	ID 679843-29		ID 679843-73		ID 679843-A9		

Spindle functions

	ID 679843-18		ID 679843-47		Red ID 679843-52		ID 679843-99
	ID 679843-19		ID 679843-48		ID 679843-65		Green ID 679843-D8
	ID 679843-20		ID 679843-49		Green ID 679843-71		ID 679843-F2
	ID 679843-21	100%	ID 679843-50		ID 679843-72		
	ID 679843-46		ID 679843-51		Red ID 679843-89		

Other keys

	ID 679843-15		ID 679843-39		ID 679843-97		Black ID 679843-E2
	ID 679843-17		ID 679843-41		ID 679843-98		ID 679843-E5
	Gray ID 679843-33		ID 679843-42		ID 679843-A7		ID 679843-F3
	Black ID 679843-34		Red ID 679843-45		ID 679843-A8		ID 679843-F4
	Orange ID 679843-35		ID 679843-58	–	Black ID 679843-D1	ENT	ID 679843-F5
	ID 679843-36		ID 679843-66	+	Black ID 679843-D2	PRT SC	ID 679843-F6
	ID 679843-37		ID 679843-75	0	ID 679843-D5		
	ID 679843-38	NC I	Green ID 679843-90	NC 0	Red ID 679843-D7		

Special keys

Keycaps can also be made with special key symbols for special applications. If you need keys for special applications, please consult your contact person at HEIDENHAIN.

Cable overview (examples)

Control system with CC or UEC (integrated keyboard)

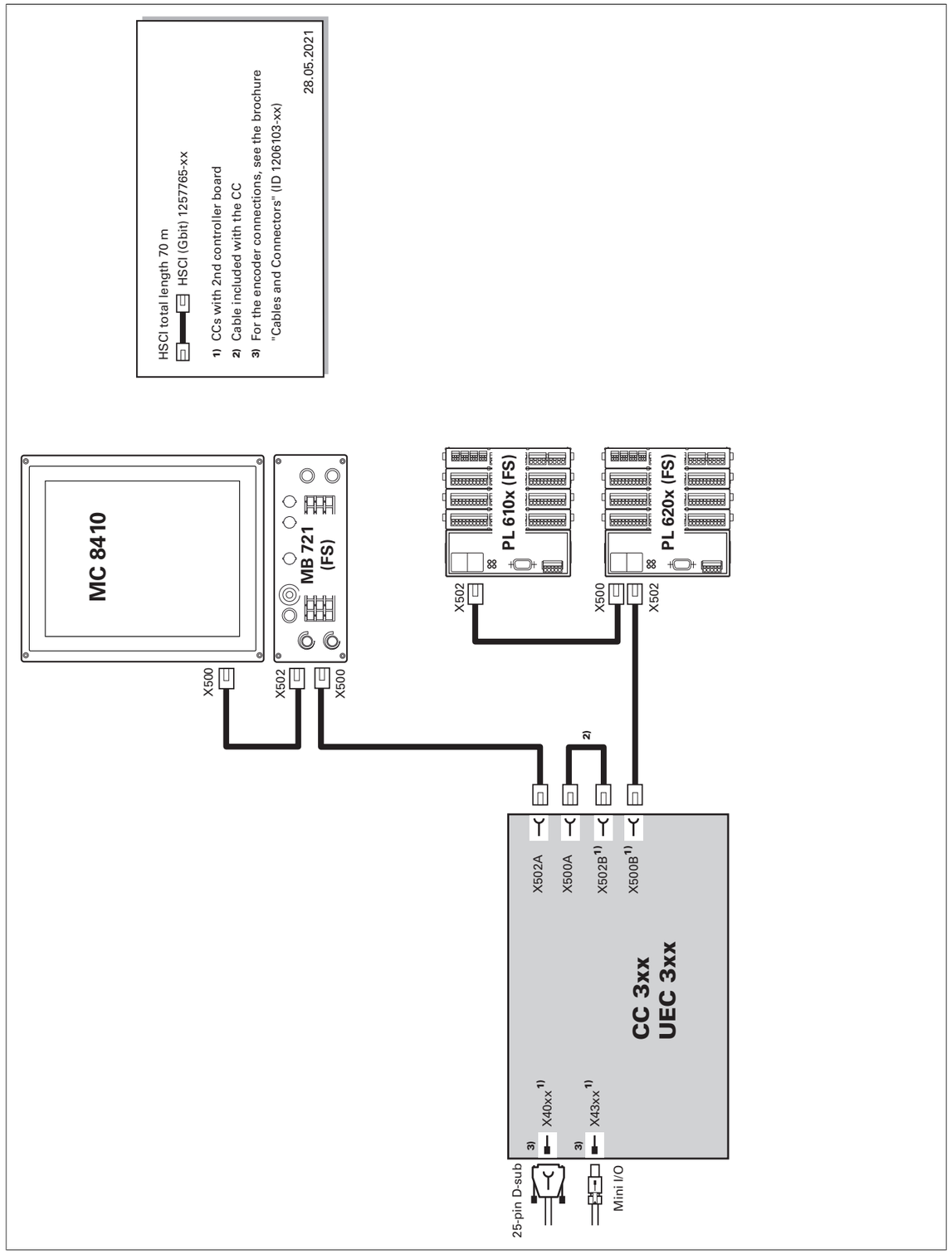

Control system with CC or UEC (separate keyboard)

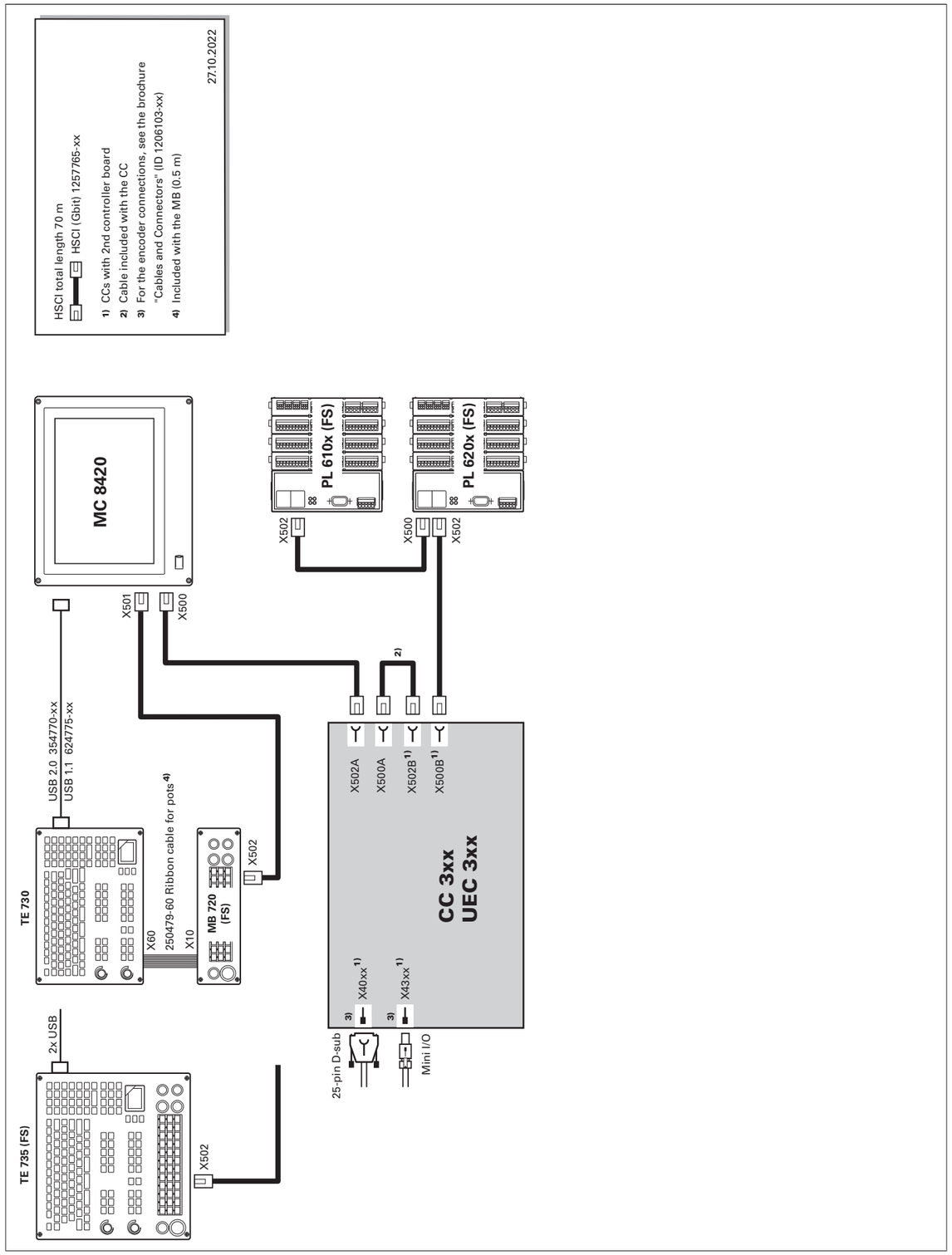

Inverter system

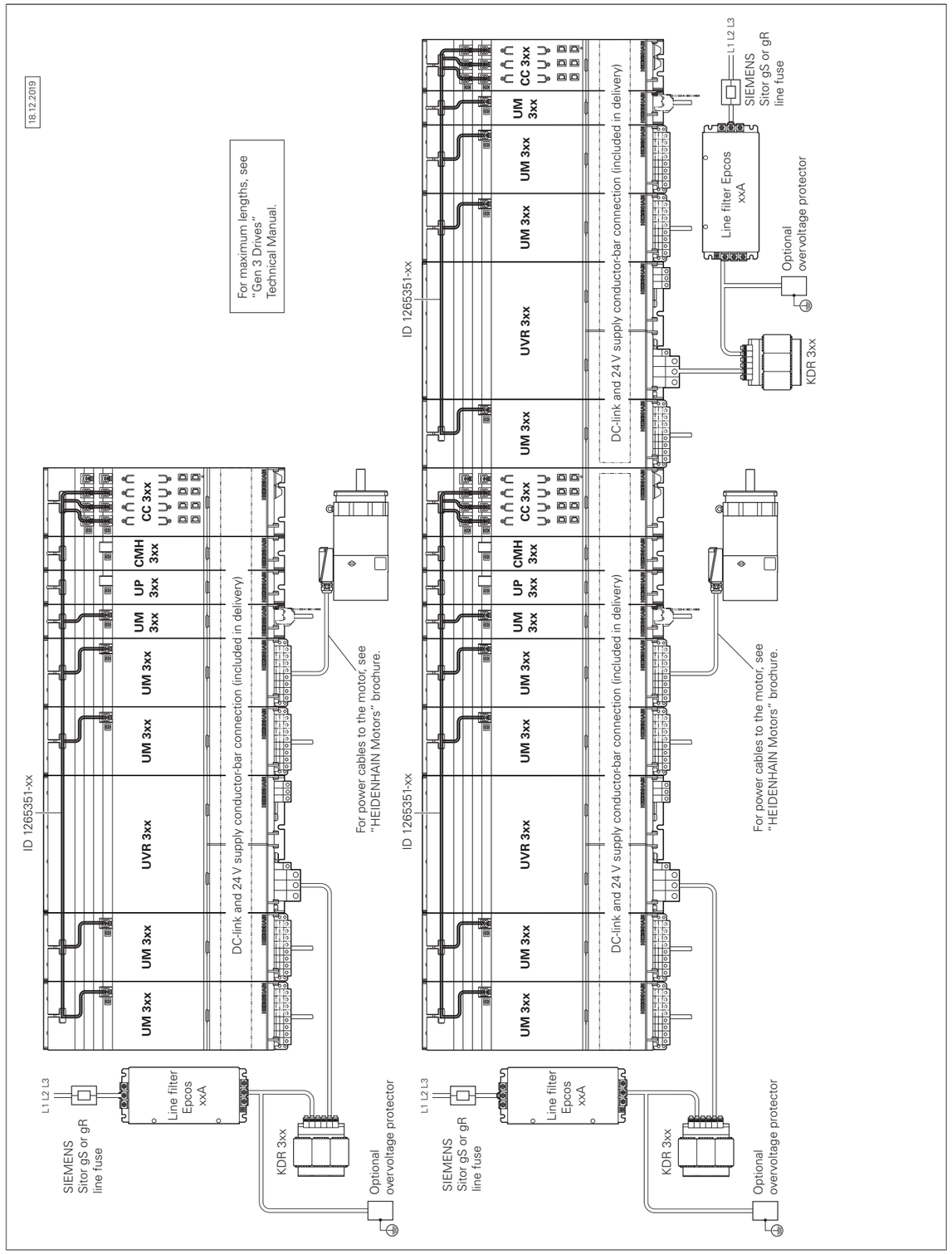

Inverters (multi-row)

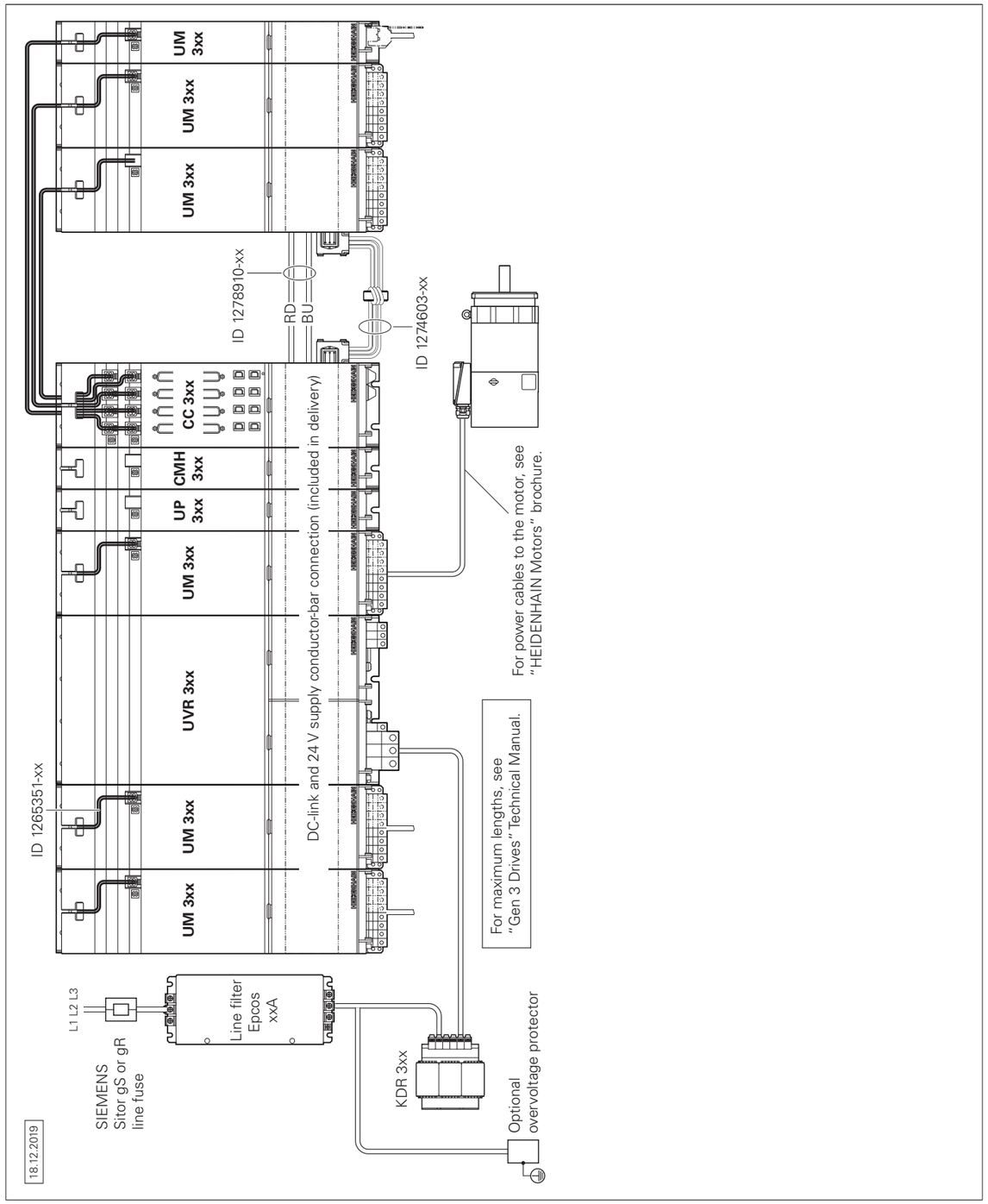

UEC 3xx (FS)

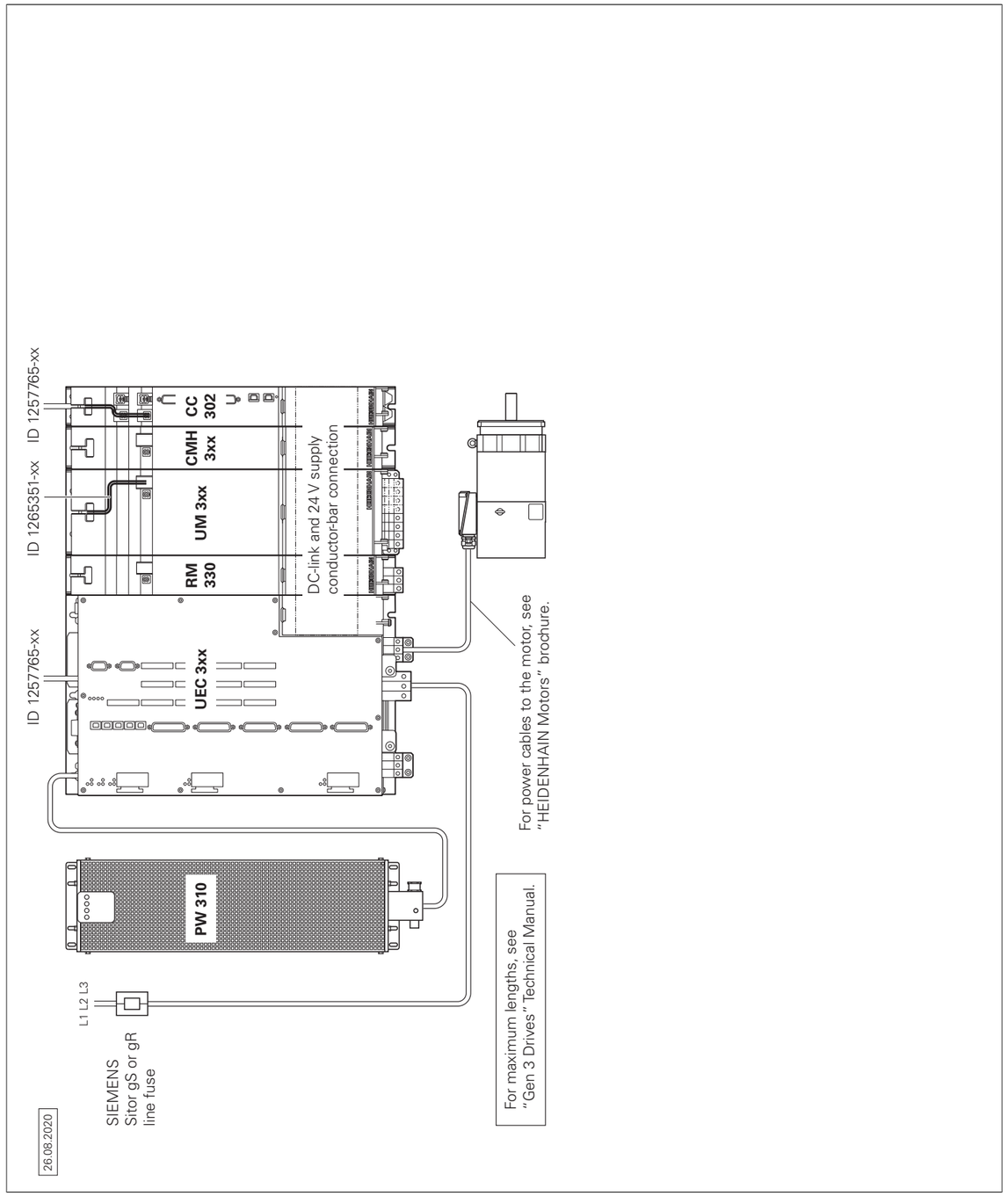

Encoders

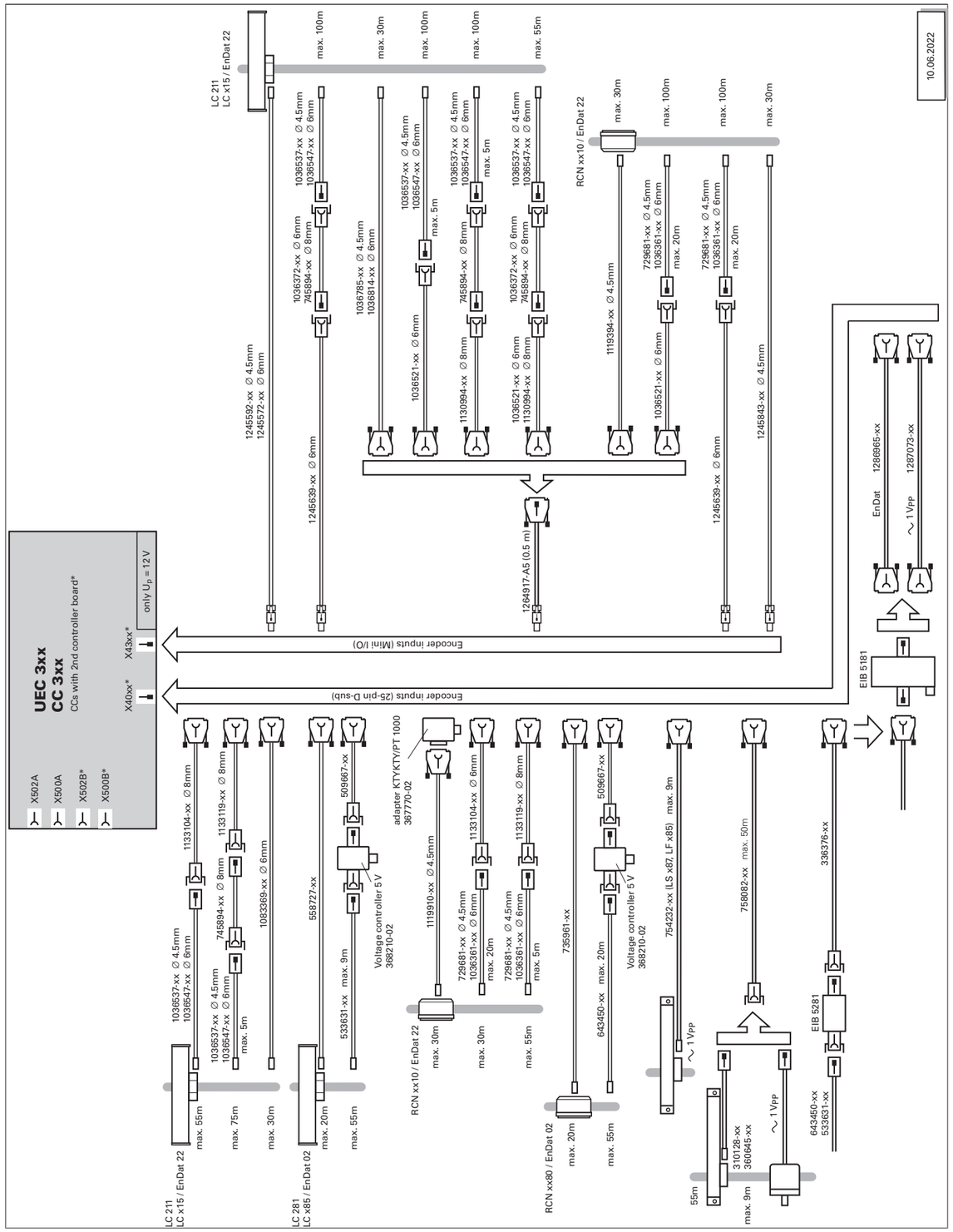

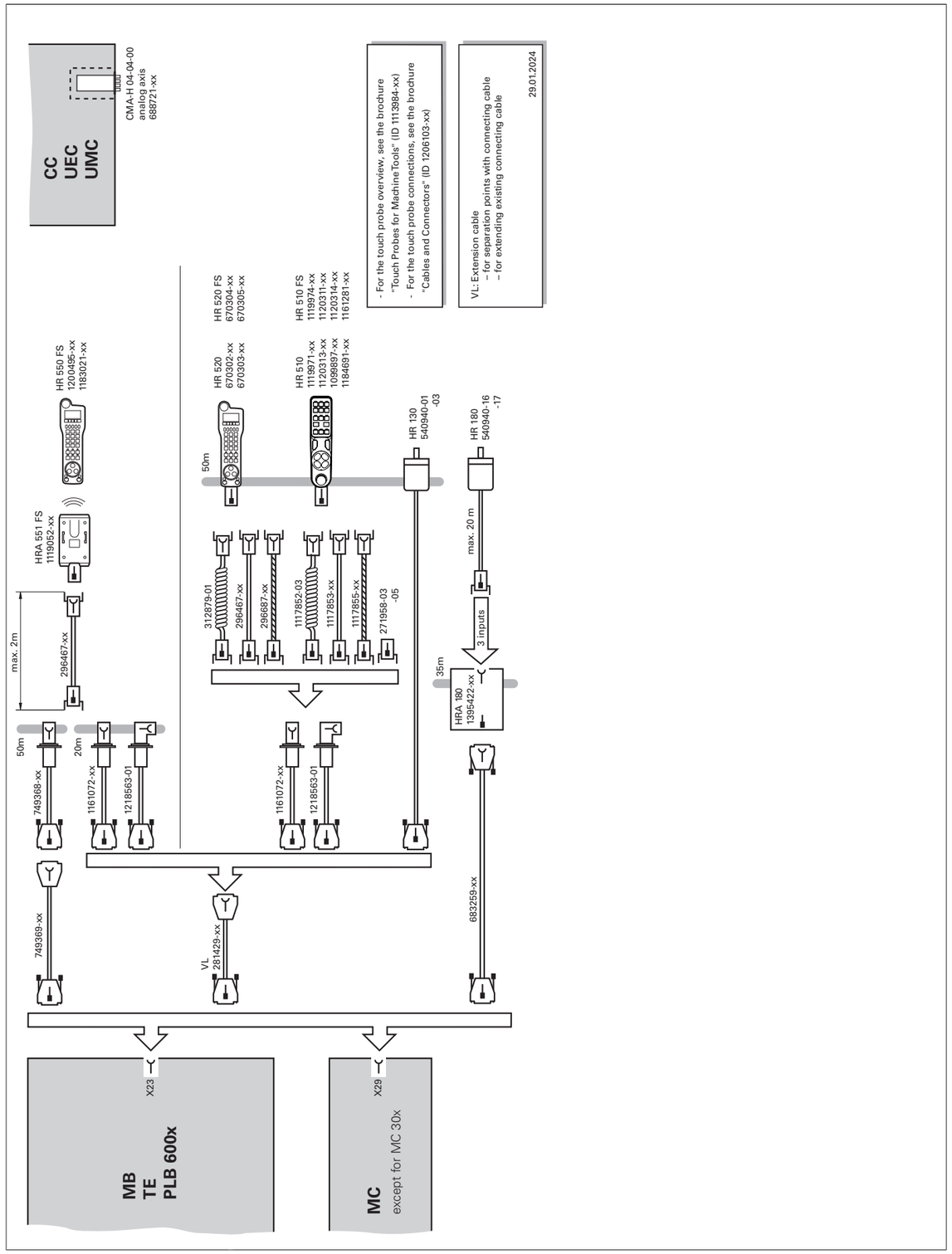

Technical description

Digital control design

Fully digital

In the fully digital control design from HEIDENHAIN, all of the components are connected with each other via purely digital interfaces. A high degree of availability for the entire system, from the main computer to the encoder, is thereby achieved, with the system being diagnosable and immune to noise. The outstanding characteristics of the fully digital design from HEIDENHAIN guarantee very high accuracy and surface finish quality, combined with high traversing speeds.

Connection of the components:
- Control components via **HSCI** (HEIDENHAIN Serial Controller Interface), the HEIDENHAIN real-time protocol for Gigabit Ethernet
- Encoders via the **EnDat 2.2** bi-directional interface from HEIDENHAIN
- Power modules via digital optical fiber cables

HSCI

HSCI, the HEIDENHAIN Serial Controller Interface, connects the main computer, controller(s), and other control components. The connection between two HSCI components is referred to as an HSCI segment. HSCI communication in Gen 3 control systems is based on Gigabit Ethernet hardware. All HSCI components and HSCI cables must therefore be Gigabit-capable. A special interface component developed by HEIDENHAIN makes short cycle times for data transfer possible.

Main advantages of the control design with HSCI:
- Hardware platform for a flexible and scalable control system (e.g., decentralized axis systems)
- High noise immunity due to digital communication between components
- Hardware basis for implementing functional safety
- Simple wiring (initial setup, configuration)
- Inverters connected via digital optical fiber cables
- Long line lengths in the overall system
- High number of possible control loops
- High number of PLC inputs/outputs
- Decentralized arrangement of the controller units

CC or UEC controller units, up to nine PL 6000 PLC I/O modules, and machine operating panels can be connected to the serial HSCI bus of the MC main computer. The HR handwheel is connected directly to the machine operating panel. The combination of monitor and main computer is especially advantageous if the computer is housed in the operating panel. Besides the power supply, all that is then required is an HSCI line to the controller unit in the electrical cabinet.

Maximum cable lengths for HSCI:
- For an HSCI segment: 70 m
- For up to 12 HSCI slaves: 290 m (total of all HSCI segments)
- For up to 13 HSCI slaves (maximum configuration): 180 m (total of all HSCI segments)

The order of the HSCI slaves can be freely chosen.

HSCI master

HSCI component	Function	1xx inverters	Gen 3 drives
MC, IPC	HSCI master	1	1
Maximum number of HSCI masters		1	1

HSCI slave

HSCI component	Function	1xx inverters	Gen 3 drives
CC 61xx UEC 1xx[2], UMC 1xx[2] CC 3xx	HSCI slave	4 controller motherboards[1]	6 controller motherboards[1]
UxC 3xx[2]	HSCI slave	–	Integrated safety 6 controller motherboards[1]
			External safety 1 (because only one PAE module permitted)
UVR 3xx	HSCI slave	–	5
PLB 62xx (FS) PLB 61xx (FS)	HSCI slave	8[3] of which up to 4 MB/TE/PLB 600x	10[3] of which up to 4 MB/TE/PLB 600x
MB (FS) / TE (FS) PLB 600x (FS)	HSCI slave		
Maximum number of HSCI slaves		12	21

[1] Distributed to CC, UEC, UMC as desired
[2] The UxC compact inverters are logically considered to be two HSCI participants. One participant is the integrated control-loop board, and the other participant is the integrated PLB.
[3] The number of inputs and outputs is limited to 1000 terminals. Dual-channel FS inputs count as one input. Read-back internal outputs are not counted. Certain inputs and outputs that are used only within the system are counted.

Control systems with integrated functional safety (FS)

Basic principle

With controls with integrated functional safety (FS) from HEIDENHAIN, Safety Integrity Level 2 (SIL 2) as per the standard EN 61508 and Performance Level "d"Category 3 as per EN ISO 13849-1 can be attained. In these standards, the assessment of safety-related systems is based on, among other things, the failure probabilities of integrated components and subsystems. This modular approach aids the manufacturers of safety-related machines in implementing their systems, since they can then build upon prequalified subsystems. This design is taken into account for in the TNC 620 control, as well as for safety-related position encoders. Two redundant, mutually independent safety channels form the basis of the controls with functional safety (FS). All safety-relevant signals are captured, processed, and output via two channels. Errors are detected through a reciprocal data comparison of the two channels' states. Consequently, the occurrence of a single error in the control does not cause a loss in safety functionality.

Design

The safety-related controls from HEIDENHAIN have a dual-channel design with mutual monitoring. The SPLC (safety-related PLC program) and SKERN (safety kernel software) software processes are the basis of the two redundant systems. The two software processes run on the MC main computer (CPU) and CC controller unit components. The dual-channel configuration through MC and CC is continued in the PLB 6xxx FS I/O systems and MB machine operating panel with FS. This means that all safety-relevant signals (e.g., permissive buttons, door contacts, emergency stop buttons) are captured via two channels, and are evaluated independently of each other by the MC and CC. The MC and CC use separate channels to also address the power modules, and to stop the motors in the event of an error.

Components

In systems with functional safety, certain hardware components handle safety-relevant tasks. In systems with FS, only safety-relevant components (including their HEIDENHAIN variant) that are approved for this are permitted.

Control components with functional safety (FS) are recognizeable by the suffix FS after the type designation (e.g., MB 721 FS).

For a current list of the components approved for functional safety (FS), refer to *Functional Safety (FS) – Supplement to the Technical Manual* (ID 1423840).

MB and TE

An MB machine operating panel with functional safety is indispensable for systems with FS. Only on such a machine operating panel do all the keys have a dual-channel design. Axes can be moved without additional permissive keys.

PLB

In systems with functional safety (FS), a combination of hardware (FS and standard) is possible, but a PLB 62xx FS is mandatory.

HR

In systems with functional safety (FS), FS handwheels are required because they are the only ones equipped with the required cross-circuit-proof permissive buttons.

Safety functions

Safety functions integrated into hardware and software:
- Safe stop reactions (SS0, SS1, and SS2)
- Safe torque off (STO)
- Safe operating stop (SOS)
- Safely limited speed (SLS)
- Safely limited position (SLP)
- Safe brake control (SBC)
- Safe operating modes
  - Operating mode 1: Automatic or production mode
  - Operating mode 2: Set-up mode
  - Operating mode 3: Manual intervention
  - Operating mode 4: Advanced manual intervention, process monitoring

Activation of functional safety (FS)

The following requirements are absolutely necessary:
- At least one PLB 62xx FS must be present in the system
- Safety-relevant control components in FS design (e.g., MB 72x FS, TE 735 FS, HR 550 FS)
- Safety-related SPLC program
- Configuration of safe machine parameters
- Wiring of the machine for systems with functional safety (FS)

Functional safety (FS) can be scaled via software options 160 to 166 and 169 (see Page 13). Only the number of safe drive systems actually needed must be enabled.

For every active drive that is assigned to a safe axis group, a safe control loop must be enabled. The control will otherwise display an error message.

Further information

For details, see the *Functional Safety FS* Technical Manual. Your contact person at HEIDENHAIN will be glad to answer any questions concerning controls with functional safety (FS).

Control systems with external safety

Basic principle

In control systems without integrated functional safety (FS), no integrated safety functions, such as safe operating modes, safe speed monitoring, or safe operating stop, are available. Such functions must be implemented entirely with the help of external safety components.

Control systems without integrated functional safety (FS) solely support the realization of the safety functions STO (safe torque off: dual-channel interruption of the motor power supply) and SBC (safe brake control: dual-channel triggering of the motor holding brakes). The dual-channel redundancy of the functions must be realized by the OEM through appropriate wiring.

Design

In control systems with external safety, a special PL module for the dual-channel triggering of STO and SBC is absolutely necessary. This module is the PAE-H 08-00-01, with which up to eight axis groups can be individually controlled.

Operating system

HEROS 5

The TNC 620 and PNC 610 work with the real-time-capable HEROS 5 operating system (HEIDENHAIN Realtime Operating System). This future-proof operating system contains the following powerful functions as part of its standard repertoire:

Network
- Network: management of network settings
- Remote Desktop Manager: management of remote applications
- Printer: management of printers
- Shares: management of network shares
- VNC: virtual network computing server

Safety
- Portscan (OEM): port scanner
- Firewall: protection against undesired network access
- SELinux: protection against unauthorized changes to system files

System
- Backup/Restore: function for backing-up and restoring the software on the control
- HELogging: evaluation and creation of log files
- Perf2: system monitor
- User administration: define users with different roles and access permissions

Tools
- Web browser: Firefox®*)
- Document Viewer: display PDF, TXT, XLSX and JPEG files
- File Manager: file explorer for managing files and memory media
- Gnumeric: spreadsheet calculations
- Leafpad: text editor for creating notes
- Ristretto: display of image files
- Orage Calendar: simple calendar function
- Screenshot: creation of screenshots
- Totem: media player for playing audio and video files

User administration

The improper operation of a control often leads to unplanned machine downtime and costly scrap. The user administration feature can significantly improve process reliability through the systematic avoidance of improper operation. Through the configurable linkage of rights with user roles, access can be tailored to the activities of the respective user.

- Logging on to the control with a user account
- User-specific HOME folder for simplified data management
- Role-based access to the control and network data

*) Firefox is a registered trademark of the Mozilla Foundation

Axes

Linear axes

Depending on its configuration, the TNC 620 can control linear axes with any axis designation (X, Y, Z, U, V, W, ...).

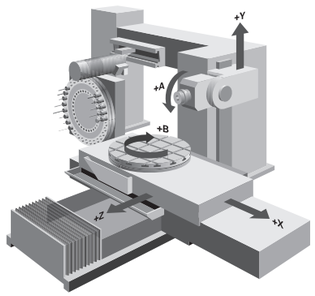

Display and programming

Feed rate in mm/min relative to the workpiece contour, or mm per spindle revolution

Feed rate override: 0% to 150%

Traverse range

The machine manufacturer defines the traverse range. The user can additionally limit the range of traverse in order to limit the working space. Three different traverse ranges can be defined (selection via PLC).

Rotary axes

The TNC 620 can control rotary axes with any axis designation (A, B, C, U, ...). Special parameters and PLC functions are available for rotary axes with Hirth coupling.

Display and programming

0° to 360° or
Feed rate in degrees per minute [°/min]

Traverse range

The machine manufacturer defines the traverse range. The user can additionally limit the range of traverse in order to limit the working space. Various traverse ranges can be defined via parameter sets for each axis (selection via PLC).

Cylinder Surface Interpolation (software option 8)

A contour defined in the working plane is machined on a cylindrical surface.

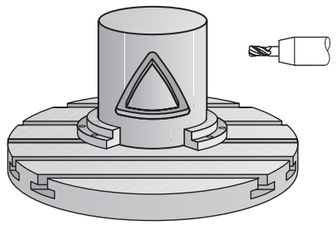

Tilting the Working Plane (software option 8)

The TNC 620 has special coordinate transformation cycles for controlling swivel heads and tilting tables. The tool lengths and the offset of the tilting axes are compensated for by the TNC.

The TNC can manage more than one machine configuration (e.g., different swivel heads).

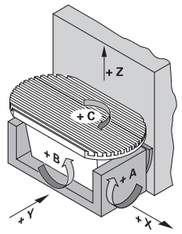

Tilting table

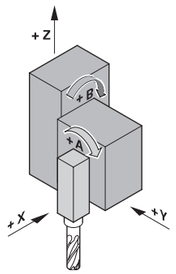

Swivel head

5-Axis Machining (software option 9)

Tool Center Point Management (TCPM)
The offset of the tilting axes is compensated for in a manner such that the position of the tool tip relative to the contour is maintained. Even during machining, handwheel positioning commands can be superimposed such that the tool tip remains on the programmed contour.

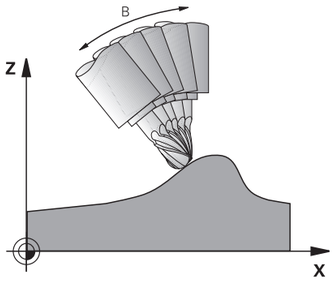

Synchronized axes (software option 24)

Synchronized axes move synchronously and are programmed with the same axis designation.

With HEIDENHAIN controls, parallel axis systems (gantry axes) such as on portal-type machines or tilting tables can be moved synchronously to each other through high-accuracy and dynamic position control.

In the case of **gantry axes**, multiple gantry slave axes can be assigned to a single master axis. They may also be distributed to multiple controller units.

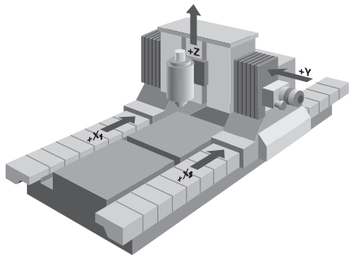

Torque Control (software option 24)

Torque control is used on machines with mechanically coupled motors, for which
- a defined distribution of drive torque is desired, or
- parts of the controlled system show a backlash effect that can be eliminated by "tensioning" the motors (e.g., toothed racks).

For torque control, the master and slave must be on the same controller motherboard. Depending on the controller unit being used, up to five slave axes can thereby be configured for each master.

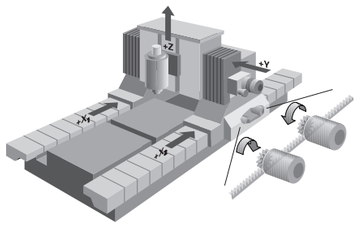

Batch Process Manager (software option 154)

Batch Process Manager provides functions for the planning and execution of multiple production jobs on the TNC 620. These functions make it possible to easily edit pallets and to alter the sequence of pending jobs. Batch Process Manager also performs a duration calculation for all planned jobs or NC programs. It informs the user as to whether, for example, all NC programs can be executed without error or whether all required tools are available with sufficient tool life. Batch Process Manager thereby ensures the smooth execution of the planned jobs.

PLC axes

Axes can be defined as PLC axes. Programming is performed through M functions or OEM cycles. The PLC axes are positioned independently of the NC axes and are therefore designated as asynchronous axes.

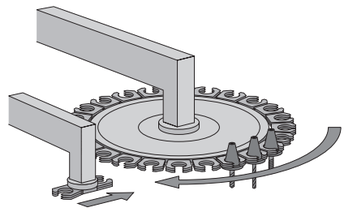

Spindle

Overview

The TNC 620 contouring control operates in conjunction with the HEIDENHAIN inverter systems with field-oriented control. As an alternative, an analog nominal speed value can be output.

Controller unit

With the CC controller units and the UxC inverters, a fundamental PWM frequency can be set for each output. In this case, every output can have its own fundamental PWM frequency (e.g., with the CC 306: X551 = 4 kHz, X552 = 5 kHz, etc.).

Possible fundamental frequencies are 3.33 kHz, 4 kHz, or 5 kHz.

With software option 49 (Double Speed), this frequency can be increased to up to 16 kHz for fast-turning spindles (e.g., HF spindles).

Maximum spindle speed

The maximum spindle speed is calculated as follows:

$$n_{max} = \frac{f_{PWM} \cdot 60000\ \text{rpm}}{NPP \cdot 5000\ \text{Hz}}$$

f_{PWM} = PWM frequency in Hz
NPP = Number of pole pairs

Operating mode switchover

For controlling the spindle, different parameter sets can be saved for closed-loop control (e.g., for wye or delta connections). You can switch between the parameter sets in the PLC.

Position-controlled spindle

The position of the spindle is monitored by the control.

Encoder

HEIDENHAIN rotary encoder with sinusoidal voltage signals (1 V_{PP}) or EnDat interface.

Tapping

There are special cycles for tapping with or without a floating tap holder. For tapping without a floating tap holder, the spindle must be operated under position control.

Spindle orientation

With a position-controlled spindle, the spindle can be positioned exactly to 0.1°.

Spindle override

0% to 150%

Gear stages

A specific nominal speed can be defined for each gear stage. The gear code is output via the PLC.

Multiple main spindles

Up to 2 spindles can be controlled alternately. The spindles are switched by the PLC. One control loop is required for each active spindle.

Encoders

Overview

For speed and position control of the axes and spindle, HEIDENHAIN offers both incremental and absolute encoders.

Incremental encoders

Incremental encoders have as their measuring standard a grating consisting of alternating lines and spaces. Relative movement between the scanning head and the scale causes the output of sinusoidal scanning signals. The measured value is calculated by counting the signals.

Reference mark

After the machine has been switched on, the relationship between the measured value and the machine position must be established by traversing the reference marks. For encoders with distance-coded reference marks, the maximum travel until automatic reference mark storage for linear encoders is only 20 mm or 80 mm, depending on the model, or 10° or 20° for angle encoders.

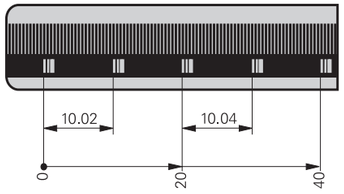

Evaluation of reference marks

The routine for traversing the reference marks can also be started for specific axes via the PLC during operation (reactivation of parked axes).

Output signals

Incremental encoders with sinusoidal output signals with ~ 1 V_{PP} levels are suitable for connection to HEIDENHAIN numerical controls.

Absolute encoders

With absolute encoders, the position information is contained in several coded tracks. Thus, an absolute reference is available immediately after switch-on. Reference-mark traverse is not necessary. For cyclical closed-loop operation, position information from incremental signals can be used, or from serial absolute signals (EnDat 2.2) with very short cycles.

EnDat interface

The TNC 620 features the serial EnDat 2.2 interface (includes EnDat 2.1) for the connection of absolute encoders.

Note: The EnDat interface on HEIDENHAIN encoders differs in its pin layout from the interface on Siemens motors with integrated absolute ECN/EQN rotary encoders. Special adapter cables are available.

Encoder inputs

Incremental and absolute linear, angle, or rotary encoders from HEIDENHAIN can be connected to the **encoder** inputs of the controller unit (only purely serial encoders with EnDat 2.2 can be connected to mini-IO connectors).

Channel inputs	**Signal level/ Interface**[1]	**Input frequency**[1]	
		Position	**Speed**
Incremental signals	~1 V_{PP} EnDat 2.1	33 kHz/350 kHz	350 kHz
Absolute position values	EnDat 2.1 EnDat 2.2	–	–

[1] Switchable

Digital servo control

Integrated inverter HEIDENHAIN synchronous or asynchronous motors are connected to the TNC 620.

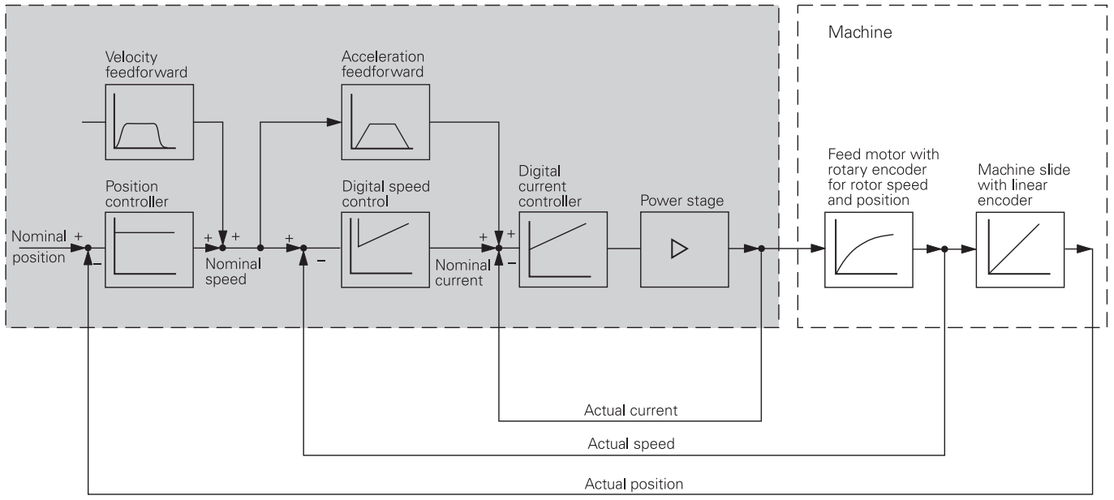

Axis feedback control The TNC 620 can be operated with feedforward control or servo lag.

Operation with feedforward control Feedforward means that a given velocity and acceleration are adapted to the machine. Together with the values calculated from the servo lag, this given velocity and acceleration becomes the nominal value. A much lower servo lag thereby manifests itself.

Operation with servo lag The term "servo lag" denotes the distance between the momentary nominal position and the actual position of the axis. The velocity is calculated as follows:

$v = k_v \cdot s_a$

v = Velocity
k_v = Position loop gain
s_a = Servo lag

Compensation of torque ripples The torque of synchronous, torque, and linear motors is subject to periodic oscillations, one cause of which can be permanent magnets. The amplitude of this torque ripple depends on the motor design and, under certain circumstances, can have an effect on the workpiece surface. During initial configuration of the axes with TNCopt, this torque ripple can be compensated for by means of the Torque Ripple Compensation (TRC) function of the CC or UEC.

Control-loop cycle times The cycle time for **path interpolation** is defined as the time interval during which interpolation points on the path are calculated. The cycle time for **fine interpolation** is defined as the time interval during which interpolation points are calculated that lie within the interpolation points calculated for path interpolation. The **cycle time for the position controller** is defined as the time interval during which the actual position value is compared to the calculated nominal position value. The **cycle time for the speed controller** is the time interval in which the actual speed value is compared to the calculated nominal speed value. The **cycle time for the current controller** is defined as the time interval during which the actual value of the electrical current is compared to the calculated nominal value of the electrical current.

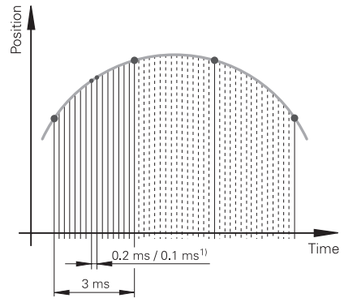

	CC/UEC/UMC
Path interpolation	See values on Page 6
Fine interpolation	
Position controller	
Speed controller	
Current controller	

Axis clamping The control loop can be opened through the PLC in order to clamp specific axes.

Double-Speed Control Loops (software option 49) Double-speed control loops permit higher PWM frequencies and shorter cycle times for the speed controller. This enables improved current control for spindles and higher controller performance for linear and torque motors.

Crossover Position Filter (CPF) To increase the stability of the position control loop in systems with resonances, the position signal from the position encoder, which is filtered through a low-pass filter, is combined with the position signal from the motor speed encoder, which is filtered through a high-pass filter. This signal combination is made available to the position controller as the actual position value. The possible position controller gain (k_V factor) is increased significantly by this. The filter separation frequency is set specifically for each axis via machine parameters. The CPF can be used only in dual-encoder systems; i.e., on motors with a speed encoder and position encoder.

Fast contour milling

Short block processing time

The TNC 620 provides the following important features for fast contour machining.

The block processing time of the MC is less than 1.5 ms. This means that when running even long programs from the hard drive, the TNC 620 can mill contours approximated in 0.2 mm line segments at a feed rate of greater than 8 m/min.

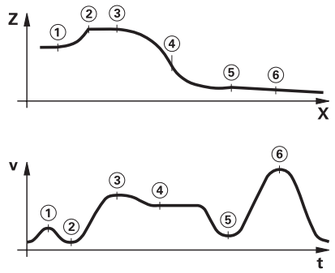

Look-ahead

The TNC 620 calculates the geometry ahead of time in order to adjust the feed rate (max. 5000 blocks). In this way, directional changes are detected in time to accelerate or decelerate the appropriate NC axes.

Jerk

The derivative of acceleration is referred to as jerk. A linear change in acceleration causes a jerk step. Such motion sequences may cause the machine to oscillate.

Jerk limiting

To prevent machine oscillations, the jerk is limited in order to attain optimum path control.

Smoothed jerk

The jerk is smoothed by nominal position value filters. The TNC 620 therefore mills smooth surfaces at the highest possible feed rate and yet keeps the contour accurate. The permitted tolerance is programmed by the user via a cycle. Special filters for HSC machining (HSC filters) can suppress machine-specific natural frequencies. The desired accuracy along with very high surface quality is attained.

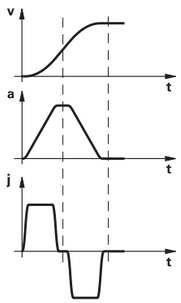

Advanced Dynamic Prediction (ADP)

The Advanced Dynamic Prediction (ADP) function enhances the look-ahead of the permissible maximum feed rate profile, thereby enabling optimized motion control for clean surface finishes and perfect contours. The strengths of ADP are evident, for example, during bidirectional finish milling through symmetrical feed behavior on the forward and reverse paths as well as through particularly smooth feed rate curves on parallel milling paths. NC programs that are generated on CAM systems have a negative effect on the machining process due to various factors such as short, step-like contours; coarse chord tolerances; and heavily rounded end-point coordinates. Through an improved response to such factors and the exact adherence to dynamic machine parameters, ADP not only improves the surface quality of the workpiece but also optimizes the machining time.

Top figure: part milled with ADP
Bottom figure: part milled without ADP

Active Chatter Control (ACC, software option 145)

During heavy machining (roughing at high cutting speed), strong milling forces arise. Depending on the tool spindle speed, the resonances in the machine tool, and the chip volume (metal-removal rate during milling), the phenomenon known as "chatter" may occur. Chatter induces heavy strain on the machine and causes ugly marks on the workpiece surface. It also increases the progress and irregularity of tool wear, even leading to tool breakage under extreme circumstances. To reduce chatter tendencies, HEIDENHAIN offers an effective option with its Active Chatter Control (ACC) solution. This option is particularly advantageous during heavy machining. ACC enables substantially higher cutting performance: depending on the machine model, the metal removal rate can be increased by 25 % or more. Thus, you can reduce the load on your machine while simultaneously increasing the life of your tools.

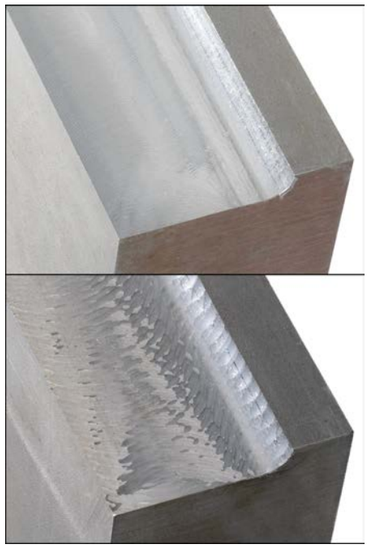

Top figure: part milled with ACC
Bottom figure: part milled without ACC

Optimized Contour Milling (OCM, software option 167)

With Optimized Contour Milling (OCM), you can machine pockets and islands of any shape while reducing tool wear thanks to highly efficient trochoidal milling. You simply program the contour as usual directly in Klartext or make use of the convenient CAD Import function. The control then automatically calculates the complex movements required for trochoidal milling.

Advantages of OCM over conventional machining:
- Reduced thermal load on the tool
- Superior chip removal
- Uniform cutting conditions
- Higher possible cutting parameters
- Higher removal rates
- No need for adjustments by the machine manufacturer
- Cutting data calculator for the automatic calculation of cutting values

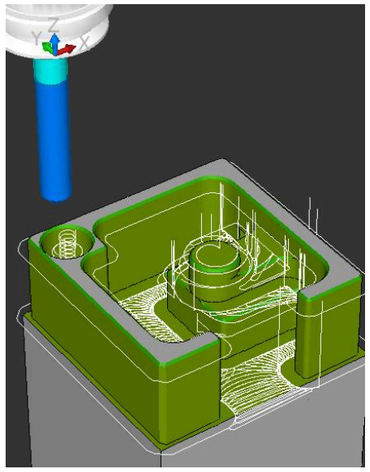

Dynamic Precision

Overview

The term Dynamic Precision encompasses a number of HEIDENHAIN milling solutions that significantly improve the dynamic accuracy of a machine tool. The dynamic accuracy of machine tools can be seen in the errors at the tool center point (TCP). The size of these errors depends on the magnitudes of the motion (e.g., speed and acceleration, as well as jerk) and result from the vibrations of the machine components, among other things. Taken together, all of these errors are partially to blame for dimensional errors and faults on the surfaces of workpieces. They therefore have a decisive impact on quality and, in the event of quality-related scrap, on productivity as well.

The functions of the Machine Vibration Control (MVC) software option and the expanded functions of the Motion Adaptive Control (MAC) software option characterize the second generation of Dynamic Precision.

Because the stiffness of machine tools is limited for reasons of design and economy, problems such as compliance and vibration within the machine design are very difficult to avoid. Dynamic Precision counteracts these problems with intelligent control technology to enable designers to further improve the quality and dynamic performance of machine tools. As a result, production time and cost are reduced.

The software options that make up Dynamic Precision Generation 2 can be deployed by the machine manufacturer both alone or in combination:

- **CTC** compensates for acceleration-dependent position errors at the tool center point, thereby increasing accuracy in acceleration phases
- **MVC** damps machine oscillations to improve workpiece surface quality through the following functions:
  – AVD (Active Vibration Damping)
  – FSC (Frequency Shaping Control)
- **PAC** position-dependent adaptation of control parameters
- **LAC** load-dependent adaptation of control parameters enhances accuracy regardless of load and aging
- **MAC** motion-dependent adaptation of control parameters

Load Adaptive Control (LAC, software option 143)

With LAC (software option 143), you can dynamically adjust controller parameters based on the load or friction.

The dynamic behavior of machines with rotary tables can vary depending on the mass moment of inertia of the fixed workpiece. The Load Adaptive Control (LAC) software option allows the control to automatically determine the current mass moment of inertia of the workpiece and the current frictional forces.

In order to optimize changed control behavior at differing loads, various controller parameters (e.g., loop gains, and feedforward controls for acceleration, holding torque, static friction, and friction at high shaft speeds) can be adapted to the currently active load.

Motion Adaptive Control (MAC, software option 144)

Along with the load-based modification of machine parameters through the LAC software option, the Motion Adaptive Control (MAC) software option allows machine parameters to be changed based on their initial values, such as speed, servo lag, or acceleration. Through this motion-dependent adaptation of the control parameters, a speed-dependent adaptation of the k_V factor can be implemented for drive systems whose stability changes due to the different traversing speeds.

The MAC software option was enhanced with the adaptive gear-error compensation of Dynamic Precision Generation 2. Surface quality problems often do not arise from machine resonances but rather from transmission errors in mechanical components of the feed drive systems. Transmission elements in the machine tool's power train, such as a rack and pinion, often cause unwanted shading on the workpiece surface. This results in cost-intensive rework, particularly in tool and mold making. The active gear-error compensation minimizes these periodic interferences.

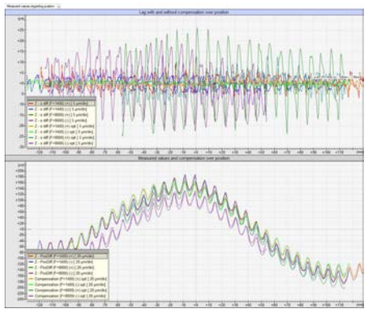

Cross Talk Compensation (CTC, software option 141)

CTC (software option 141) enables the compensation of dynamic position errors potentially arising from acceleration forces.

To increase productivity, machine tool users ask for ever higher feed rates and acceleration values, while at the same time needing to maintain the highest possible surface quality and accuracy, placing very special requirements on path control.

Highly dynamic acceleration processes introduce forces to the structure of a machine tool. They can deform parts of the machine and thereby lead to deviations at the tool center point (TCP). Besides deformation in axis direction, the dynamic acceleration of an axis due to mechanical axis coupling can also result in deformation of axes that are perpendicular to the direction of acceleration. The resulting position error at the TCP in the direction of the accelerated axis and lateral axes is proportional to the amount of acceleration.

If the dynamic position errors relative to the axis acceleration are known, then these acceleration-dependent errors can be compensated for by the Cross Talk Compensation (CTC) software option in order to avoid negative effects on the surface quality and accuracy of the workpiece. Often, the resulting error at the TCP depends not only on the acceleration but also on the position of the axes in the working space. This can also be compensated for by CTC.

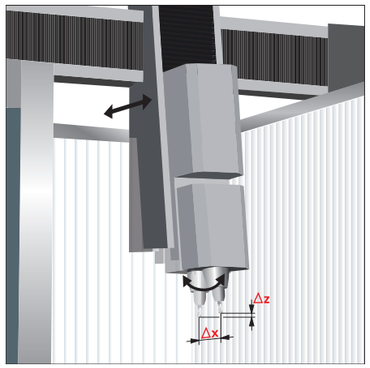

Machine Vibration Control (MVC, software option 146)

The high dynamics of modern machine tools lead to deformations in the machine base, frame, and drive train during acceleration and deceleration of the feed motors. This results in vibrations, such as machine setup vibrations, that may reduce the attainable accuracy and surface quality of the workpieces. With Machine Vibration Control (MVC, software option 146), two functions that effectively suppress low-frequency vibrations are available.

Active Vibration Damping (AVD)

The Active Vibration Damping (AVD) controller function increases dynamic rigidity and damps the especially critical low-frequency oscillations. At the same time, it optimizes the control behavior of the affected axis so that high-accuracy workpieces with excellent surface quality can also be produced at high feed rates.

Frequency Shaping Control (FSC)

The Frequency Shaping Control (FSC) function suppresses the inducement of low-frequency oscillations through a specific feedforward control. This can be used to increase dynamic limit values (e.g. jerk), and therefore make reduced machining times possible.

The combination of the two functions (AVD and FSC) optimizes the dynamics, surface quality, and productivity.

Position Adaptive Control (PAC, software option 142)

Position Adaptive Control (PAC, software option 142) permits the dynamic, position-dependent adaption of controller parameters based on the spatial position of the tool.

The specifics of a machine's kinematics cause a unique position of the axes' center of gravity in the working space. This results in a variable dynamic behavior of the machine, which can negatively influence the control's stability depending on the axis positions.

To take full advantage of the machine's dynamic performance, the Position Adaptive Control (PAC) software option enables changes to machine parameters based on position, thus permitting assignment of the respective optimal loop gain to defined interpolation points. Additional position-dependent filter parameters can be defined in order to further increase control loop stability.

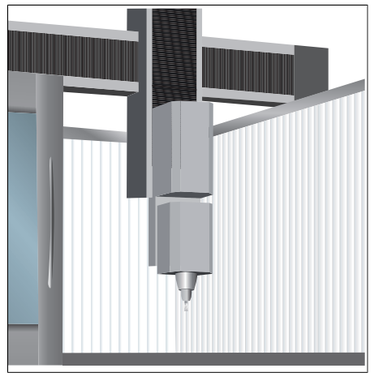

Monitoring functions

Description

During operation the control monitors the following factors, among others*):
- Amplitude of encoder signals
- Edge separation of encoder signals
- Absolute position for encoders with distance-coded reference marks
- Current position (servo lag monitoring)
- Actual path traversed (movement monitoring)
- Position deviation at standstill
- Nominal speed value
- Checksum of safety-related functions
- Supply voltage
- Voltage of the buffer battery
- Operating temperature of MC and CPU
- Run time of PLC program
- Motor current / motor temperature
- Temperature of power module
- DC-link voltage
- Difference between position and speed encoder (PosDiff)
- Serial connection of all devices in the HSCI chain
- Quality of optical connections between CC and UM
- Voltages of the main power supply
- Utilization of the 24 V supply

With EnDat 2.2 encoders:
- CRC checksum of the position value
- EnDat alarm Error1→ EnDat status alarm register (0xEE)
- EnDat alarm Error2
- Edge speed of 5 µs
- Transmission of the absolute position value on the time grid

In the event of hazardous errors, an EMERGENCY STOP message is sent to the external electronics via the control-is-ready output, and the axes are brought to a stop. The correct connection of the TNC 620 in the machine's EMERGENCY STOP loop is checked when the control system is switched on. In the event of an error, the control displays a message in plain language.

*) No safety functions

Context-sensitive help

A context-sensitive help function is available to the user via the HELP or ERR key. In the event of an error message, the control displays the cause of the error and the possibilities for fixing it. The machine manufacturer can also implement this user support for PLC error messages.

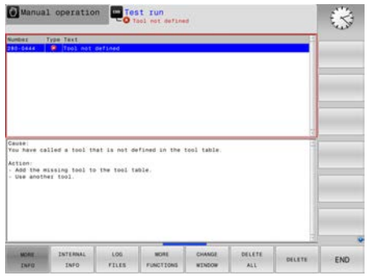

CAD Model Optimizer (software option 152)

The CAD Model Optimizer software option gives the user the power to simplify and heal 3D models. The user loads the output model into the CAD viewer. The 3D mesh function simplifies the model and autonomously corrects errors such as small holes in the solid model or self-intersecting lines on a surface. The result is a valid STL file that can be used for various functions of the control.

KinematicsDesign (accessory)

KinematicsDesign is a PC program for creating adaptable kinematic configurations. It supports:
- Complete kinematic configurations
- Transfer of configuration files between control and PC
- Description of tool-carrier kinematics

If KinematicsDesign is connected to a control online (operation is also possible with the programming station software), then machine movements can be simulated when the axes are moved.

Visualization options range from a pure depiction of the transformation chain and a wire model all the way to the complete machine model.

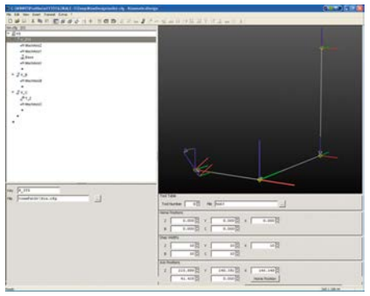

Component Monitoring (software option 155)

The overloading of machine components is often the cause of expensive machine damage and unplanned production downtime. Component monitoring keeps the user informed about the current load on the spindle bearings and reacts upon exceedance of the specified limit values (e.g., with an NC stop). The MONITORING HEATMAP function allows you, from the NC program, to color the real-time machining simulation with the status of a monitoring task. That way the workpiece shows you where a component was subject to a strong load.

During their lifecycle, the machine components which are subject to loads (e.g., guides, ball screws, etc.) become worn and thus the quality of the axis movements deteriorates. This, in turn, affects production quality. With Component Monitoring (software option 155) and a cycle, the control is able to measure the current condition of the machine. As a result, any deviations from the machine's shipping condition due to wear and aging can be measured. The machine manufacturer can read and evaluate the data, and react using predictive maintenance, thereby avoiding unplanned machine downtimes.

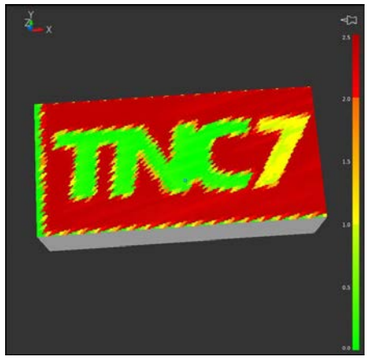

Error compensation

Overview

The TNC 620 automatically compensates for mechanical errors of the machine.

Linear error

Linear error can be compensated for each axis over their entire travel range.

Nonlinear error

The TNC 620 can compensate for ball-screw pitch errors and sag errors simultaneously. The compensation values are stored in a table. Nonlinear axis-error compensation also makes it possible to compensate for position-dependent backlash.

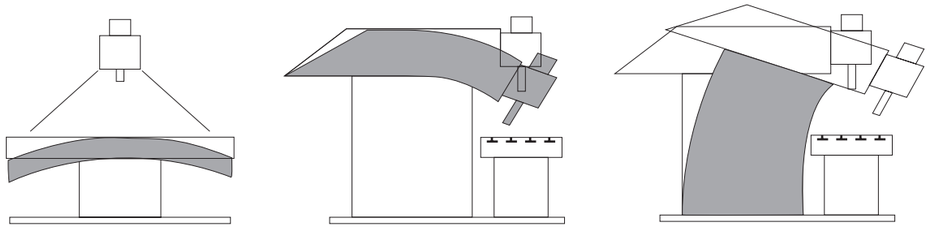

Backlash

The play between table movement and rotary encoder movement during direction changes can be compensated for in length measurements by the spindle and rotary encoder. This backlash is outside the controlled system.

Hysteresis

The hysteresis between the table movement and motor movement is also compensated for in direct length measurements. In this case, the hysteresis is within the controlled system.

Reversal spikes

In circular movements, reversal spikes can occur at quadrant transitions due to mechanical influences. The TNC 620 can compensate for these reversal spikes.

Static friction

At very low feed rates, high static friction can cause the slide to stop and start repeatedly for short periods. This is commonly known as stick-slip. The TNC 620 can compensate for this problematic behavior.

Sliding friction

Sliding friction is compensated for by the speed controller of the TNC 620.

Thermal expansion

To compensate for thermal expansion, the machine's expansion behavior must be known.

The temperature is measured via thermistors connected to the analog inputs of the TNC 620. The PLC evaluates the temperature information and passes a compensation value to the NC.

KinematicsOpt (software option 48)

Using the KinematicsOpt function, machine manufacturers or users can check the accuracy of rotary or swivel axes, and compensate for possible displacements of the center of rotation of these axes. The deviations are automatically transferred to the kinematics description and can be taken into account in the kinematics calculation.

In order to measure the rotary axes, you must attach a calibration sphere (e.g., KKH 100 or KKH 250 from HEIDENHAIN) at any position on the machine table. A HEIDENHAIN touch probe uses a special cycle to probe this calibration sphere, and measures the rotary axes of the machine fully automatically. But first you define the resolution of the measurement and define for each rotary axis the range that you want to measure. The measuring process is the same, regardless of whether the rotary axis is a rotary table, tilting table, or a swivel head.

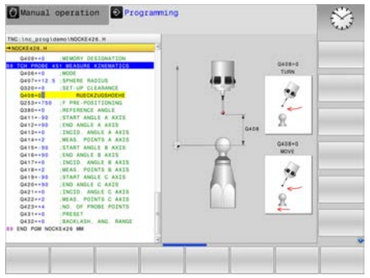

Calibration sphere (accessory)

HEIDENHAIN offers calibration spheres as accessories for the measurement of rotary axes with KinematicsOpt:

KKH 80	Height: 80 mm	ID 655475-03
KKH 250	Height: 250 mm	ID 655475-01

Initial setup and diagnostic aids

Overview

The TNC 620 provides extensive internal aids for diagnostics and initial setup. It also includes highly effective PC software for diagnostics, optimization, and remote operation.

ConfigDesign (accessory)

PC software for configuring the machine parameters
- Stand-alone machine-parameter editor for the control; all support information, additional data, and input limits are shown for the parameters
- Configuration of machine parameters
- Comparison of parameters from different controls
- Importing of service files: easy testing of machine parameters in the field
- Rule-based creation and management of machine configurations for multiple controls (together with PLCdesign)

TNCdiag

The HEIDENHAIN TNCdiag application evaluates the status and diagnostic information of HEIDENHAIN components (with an emphasis on the drive systems) and graphically images the data:
- Status and diagnostic information about the HEIDENHAIN components (drive electronics, encoders, input/output devices, etc.) connected to the control
- History of the recorded data

TNCdiag comes in a PC version for the analysis of servicing files and in a control version for the display of real-time data.

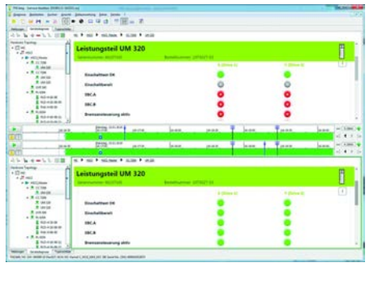

Oscilloscope

The TNC 620 features an integrated oscilloscope. Both X/t and X/Y graphs are possible. The following characteristic curves can be recorded and stored in six channels:
- Actual value and nominal value of the axis feed rate
- Contouring feed rate
- Nominal and actual position
- Servo lag of the position controller
- Nominal and actual values for speed, acceleration and jerk
- Content of PLC operands
- Encoder signal (0° – A) and (90° – B)
- Difference between position and speed encoder
- Nominal velocity value
- Integral-action component of the nominal current value
- Torque-determining nominal current value

Logic signals

Simultaneous graphic representation of the logic states of up to 16 operands (markers, words, inputs, outputs, counters, timers)
- Marker (M)
- Input (I)
- Output (O)
- Timer (T)
- Counter (C)
- IpoLogik (X)

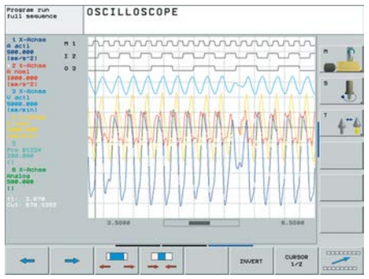

TNCopt (accessory)

PC software for initial setup of digital control loops.
Functions (among others):
- (Automatic) initial setup of the control loops (current, speed, position)
- (Automatic) optimization of various feedforward controls
  - Reversal peaks
  - Friction parameters, acceleration feedforward control
  - Torsion compensation
- (Automatic) system identification
- Circular form test, contour test
- Working space scan, 3D workspace inspector

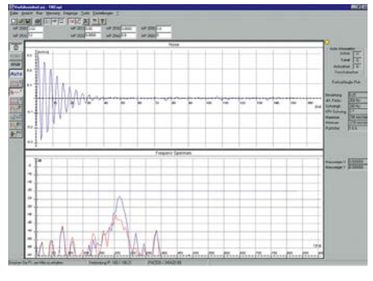

Online Monitor (OLM)

The online monitor is a component of the TNC 620 and is called with a code number. It supports initial setup and diagnosis of control components through the following:
- Display of control-internal variables for axes and channels
- Display of controller-internal variables (if a CC is present)
- Display of hardware signal states
- Various trace functions
- Activation of spindle commands
- Enabling of control-internal debug outputs

TNCscope (accessory)

PC software for transferring the oscilloscope files to a PC. With TNCscope you can record and save up to 32 channels simultaneously.
Note: The trace files are saved in the TNCscope data format.

API DATA

With the API DATA function, the control displays the states or contents of the symbolic API markers and API double words.

Table function

The current conditions of the markers, words, inputs, outputs, counters, and timers are displayed in tables. The conditions can be changed through the keyboard.

Trace function

The current content of the operands and the accumulators is shown in the statement list in each line in hexadecimal or decimal code. The active lines of the statement list are marked.

Log

For the purpose of error diagnostics, all error messages and keystrokes are recorded in a log. The entries can be read using the **PLCdesign** or **TNCremo** software for PCs.

RemoteAccess (accessory)

PC software for remote diagnostics, monitoring and operation.

RemoteAccess grants quick and easy access to HEIDENHAIN controls that are installed within the same local network (intranet).

RemoteAccess offers the following functions:
- Display of the control's user interface on the PC
- Operating the control directly through the live view as well as with the integrated keyboard
- Automatic integration of HEIDENHAIN PC tools
- Can be enhanced with OEM-specific applications

Single-station license	ID 1339577-01
Network license (14 stations)	ID 1339577-02
Network license (20 stations)	ID 1339577-03

Secure Remote Access (SRA)

The optional Secure Remote Access enhancement makes it possible to establish an encrypted connection with a HEIDENHAIN control via the internet. This connection is end-to-end encrypted. Once the SRA connection has been set up, RemoteAccess behaves like a local network connection. This connection can be used by HEIDENHAIN PC tools and by any other PC application.

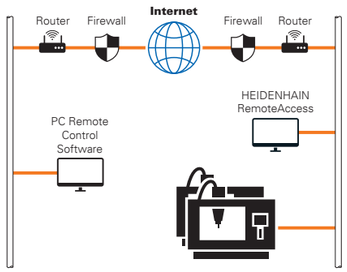

Possible applications when using SRA:
- User support
- Online training courses
- Diagnostics, remote maintenance and online support
- Secure internet connection as the basis for other OEM services

Export license
The Secure Remote Access expansion requires an export license in accordance with Annex I of the EU Dual-Use Regulation. A valid export license is mandatory for operating this application outside of the EU or with partners outside of the EU.

License model
The expansion is offered as a software subscription with a two-year license period. The license term is automatically renewed for twelve months unless the contract is terminated with at least three months' notice. The license requires a HEIDENHAIN Portal account.

Scope of delivery
A license key is included in order to enable the Secure Remote Access expansion. During activation in the HEIDENHAIN Portal, the license key is assigned to the registered user.

Secure Remote Access (SRA) ID 1356741-01
Software subscription (2-year license term)

Bus diagnosis

In Diagnosis mode, the structure of the connected bus systems as well as the details of the connected components can be shown in an intuitive manner.

TNCtest

Acceptance tests on machine tools with external or integrated functional safety (FS) must be conducted reproducibly and verifiably.

The TNCtest and TestDesign program package can be used to plan and perform acceptance tests on machine tools with HEIDENHAIN controls. The acceptance tests are planned with TestDesign and run with TNCtest.

The TNCtest programs are designed to provide support during acceptance testing, provide required information, and perform automatic configuration, as well as record data and evaluate the data semiautomatically. A tester must evaluate manually whether a test case passed or failed.

TNCanalyzer

The TNCanalyzer application from HEIDENHAIN provides for simple and intuitive evaluation of servicing and log files:

- Loading of servicing and log files
- Analysis of temporal sequences and static states
- Filters and search functions
- Data export (HELogger, CSV, and JSON formats)
- Definition of application-specific analysis profiles
- Preconfigured analysis profiles
- Graphic display of signals via TNCscope
- Interaction with other tools that are intended for the display of special sections of the service file

Integrated PLC

Overview

The PLC program is created by the machine manufacturer either on the control or with the PLC development software **PLCdesign** (accessory). Machine-specific functions are activated and monitored via the PLC inputs/outputs. The number of PLC inputs/outputs required depends on the complexity of the machine.

PLC inputs/outputs

PLC I/Os are available via the external PL 6000 and UxC. The PLC I/Os and the PROFINET IO or PROFIBUS DP-capable I/O system must be configured with the IOconfig PC software.

PLC programming

Format	Statement list
Memory	4 GiB
Cycle time	9 ms to 30 ms (adjustable)
Command set	• Bit, byte, and word commands • Logical operations • Arithmetic commands • Comparisons • Bracketed terms • Jump commands • Subprograms • Stack operations • Submit programs • Timers • Counters • Comments • PLC modules • Strings

Encryption of PLC data

The encrypted PLC partition (PLCE:) provides the machine manufacturer with a tool for preventing third parties from viewing or changing files. The files on the PLCE partition can be read only by the control itself or by using the correct OEM keyword. This ensures that proprietary expertise and special customer-specific solutions cannot be copied or changed.

The machine manufacturer can also determine the size of the encrypted partition. This is not determined until the machine manufacturer creates the PLCE partition. Another advantage is that, in spite of the encryption, the data can backed up from the control to a separate data medium (USB drive or network, e.g., through TNCremo) and later restored. You need not enter the password, but the data cannot be made visible until the keyword is supplied.

PLC window

The TNC 620 can display PLC error messages in the dialog line during operation.

Small PLC window

The TNC 620 can show additional PLC messages and bar graphs in the small PLC window.

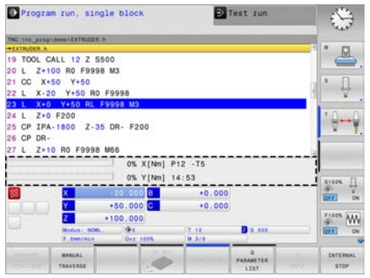

Small PLC window

PLC soft keys

The machine manufacturer can display his own PLC soft keys in the vertical soft-key row on the screen.

PLC positioning

All closed-loop axes can also be positioned via the PLC.
PLC positioning of the NC axes cannot be superimposed on NC positioning.

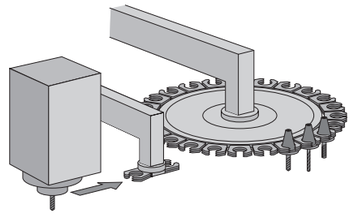

PLC axes

Axes can be defined as PLC axes. They are programmed by means of M functions or OEM cycles. The PLC axes are positioned independently of the NC axes.

PLCdesign (accessory)

PC software for PLC program development.
The PC program **PLCdesign** can be used for easy creation of PLC programs. It comes with an extensive selection of sample PLC programs.

Functions:
- User-friendly text editor
- Menu-guided operation
- Programming of symbolic operands
- Modular programming techniques
- "Compiling" and "linking" of PLC source files
- Operand commenting, creation of the documentation file
- Comprehensive help system
- Data transfer between the PC and control
- Creation of PLC soft keys

Python OEM Process (software option 46)

The Python OEM Process software option gives the machine manufacturer a powerful tool for using a high-level, object-oriented programming language in the control (PLC). Python is an easy-to-learn script language supporting all necessary high-level language elements.

Python OEM Process can be employed universally for machine functions, complex calculations, and the display of special user interfaces. User-specific or machine-specific solutions can be efficiently implemented. Numerous libraries on the basis of Python and GTK are available, regardless of whether you want to create special algorithms for special functions, or separate solutions such as an interface for machine maintenance software.

The applications you create can be included via the PLC in the familiar PLC windows, or they can be displayed in separate free windows that can be expanded to the control's full screen size.

Simple Python scripts can also be executed without enabling Python OEM Process (software option 46). 10 MB of dedicated memory are reserved for this function. For more information, refer to the *Python in HEIDENHAIN Controls* Technical Manual.

PLC basic program

The PLC basic program serves as a basis for adapting the control to the requirements of the respective machine. It can be downloaded from the Internet. These essential functions are covered by the PLC basic program:

Axes
- Control of analog axes
- Axes with clamping mode, central drive, and the Hirth grid
- Synchronized axes
- 3D head with C-axis mode
- Reference run, reference end position
- Axis lubrication

Spindles
- Control and orientation of the spindles
- Spindle clamping
- Alternative double-spindle operation
- Parallel spindle operation
- Conventional 2-stage gear system
- Wye/delta connection switchover (static, dynamic)

Tool changers
- Manual tool changer
- Tool changer with pick-up system
- Tool changer with dual gripper
- Tool changer with positively driven gripper
- Rotating tool magazine with closed-loop axis
- Rotating tool magazine with controlled axis
- Servicing functions for the tool changer
- Python tool management

Pallet changers
- Translational pallet changer
- Rotatory pallet changer
- Servicing functions for the pallet changer

Safety functions
- Emergency stop test (EN 13849-1)
- Brake test (EN 13849-1)
- Repeated switch-on test for a wireless handwheel

General functions
- Feed rate control
- Control of the coolant system (internal, external, air)
- Temperature compensation
- Activate tool-specific torque monitoring
- Hydraulic control
- Chip conveyor
- Indexing fixture
- Touch probes
- PLC support for handwheels
- Control of doors
- Handling of M functions
- PLC log
- Display and management of PLC error messages
- Diagnosis screen (Python)
- Python example applications
- Status display in the small PLC window

Interfacing to the machine

OEM cycles (software option 19)

The machine manufacturer can create and store his own cycles for recurring machining tasks. These OEM cycles are used in the same way as standard HEIDENHAIN cycles.

CycleDesign (accessory)

The soft-key structure for the cycles is managed using the **CycleDesign** PC program. In addition, CycleDesign can be used to store help graphics and soft keys in BMP format in the TNC. Graphic files can be compressed to ZIP format to reduce the amount of memory used.

Tool management

With integral PLC, the tool changer is moved either via proximity switch or as a controlled axis. Complete tool management with tool life monitoring and replacement tool monitoring is carried out by the TNC 620.

Tool measurement (software option 17)

With the TT tool touch probes (accessory), tools can be measured and inspected. Standard cycles for automatic tool measurement are available in the control. The control calculates the probing feed rate and the optimal spindle speed. The measured data are stored in a tool table.

Touch-probe configuration (software option 17)

All touch-probe data can be configured conveniently through the touch-probe table. All HEIDENHAIN touch probes are preconfigured and can be selected through a drop-down menu.

Pallet management

Pallet insertions can be controlled via PLC axes. The user defines the pallet sequence, pallet presets, and workpiece presets in the pallet tables. The pallet tables are freely configurable; any information can be stored in the tables and called via the PLC. Pallet table execution can be workpiece- or tool-oriented.

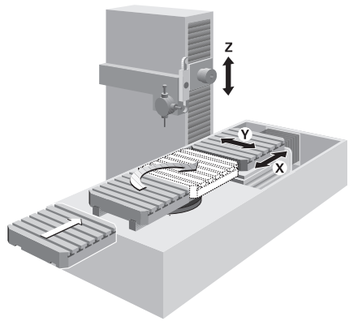

Data transfer and communication

Data interfaces

Overview

The TNC 620 is connected to PCs, networks, and other data storage devices via data interfaces.

Ethernet

Using the Ethernet data interface, you can network the TNC 620 based on the TCP/IP protocol. For connection to the data network, the control features a 1000BASE-T (twisted pair Ethernet) connection.

Maximum transmission distance:
Unshielded: 100 m
Shielded: 400 m

Network connection
- NFS file server
- Windows networks (SMB)

Data transfer speed: Approx. 400 to 800 Mbit/s (depending on the file type and network utilization)

Protocols

The TNC 620 can transfer data using various protocols.

Standard data transfer: The data is transferred character by character. The number of data bits, stop bits, the handshake, and character parity must be set by the user.

Blockwise data transfer: The data is transferred blockwise. A block check character (BCC) is used for data backup. This method improves data security.

OPC UA NC Server: Connection of an OPC UA application

USB

The TNC 620 features USB ports for connecting standard USB devices such as a mouse, disk drive, etc. The MCs have four USB 3.0 ports. One of them leads to the TE, where a cover cap protects it from contamination. More USB 2.0 ports are in the integrated USB hub on the rear of the BF. The USB ports are rated for a maximum of 0.5 A.

USB cables

Cable length up to 5 m	ID 354770-xx
Cable length 6 m to 30 m with integrated amplifier; limited to USB 1.1.	ID 624775-xx

Software for data transfer

We recommend using HEIDENHAIN software to transfer files between the TNC 620 and a PC.

TNCremo (accessory)

This PC software package supports the user in transferring data from the PC to the control. This software implements blockwise data transfer with block check characters (BCC).

Functions:
- Data transfer (including blockwise)
- Remote control (only serial)
- File management and data backup of the control
- Reading out the log
- Print-out of screen contents
- Text editor
- Managing more than one machine

TNCremoPlus (accessory)

In addition to the features already familiar from TNCremo, TNCremoPlus can also transfer the current content of the control's screen to the PC (live screen). This makes it very simple to monitor the machine.

Additional functions:
- Interrogation of control information (NC up time, machine up time, machine running time, spindle running time, pending errors, data from the data servers—e.g., symbolic PLC operands)
- Overwriting of specific tool data based on values from a tool presetter

TNCremoPlus ID 340447-xx

Connected Machining

Overview

Connected Machining makes uniformly digital job management possible in networked manufacturing. You also profit from:
- Easy data usage
- Time-saving procedures
- Transparent processes

Remote Desktop Manager (software option 133)

Remote operation and display of external computers over an Ethernet connection (e.g., Windows PC). The information is displayed on the control's screen. Remote Desktop Manager allows you to access important applications, such as CAD/CAM applications or job management, from the control.

Remote Desktop Manager ID 894423-xx

HEIDENHAIN DNC (software option 18)

The development environments on Windows operating systems are particularly well suited as flexible platforms for application development in order to come to terms with the increasingly complex requirements of the machine's environment.

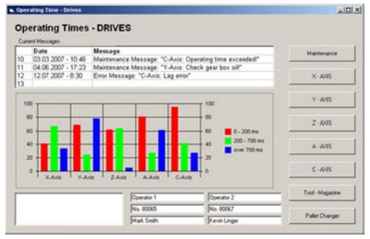

The flexibility of the PC software and the large selection of ready-to-use software components and standard tools in the development environment enable you to develop PC applications of great use to your customers in a very short time, for example:
- Error reporting systems that, for example, send a text message to the customer's cell phone reporting problems on the currently running machining process
- Standard or customer-specific PC software that decidedly increases process reliability and equipment availability
- Software solutions controlling the processes of manufacturing systems
- Information exchange with order management software

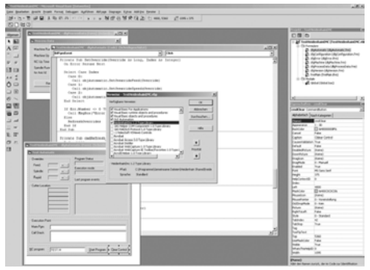

The HEIDENHAIN DNC software interface is an attractive communication platform for this purpose. It provides all the data and configuration capabilities needed for these processes so that an external PC application can evaluate data from the control and, if required, influence the manufacturing process.

RemoTools SDK (accessory)

To enable you to use HEIDENHAIN DNC effectively, HEIDENHAIN offers the RemoTools SDK development package. It contains the COM component and the ActiveX control for integration of the DNC functions in development environments.

RemoTools SDK ID 340442-xx

For more information, refer to the *HEIDENHAIN DNC* brochure.

OPC UA NC Server (software option 56-61)

The OPC UA standard (Open Platform Communications Unified Architecture) has emerged in recent years as a well-established interface for secure and reliable data exchange in industrial environments. The HEIDENHAIN OPC UA NC Server software option makes this forward-looking interface available on the TNC 620. OPC UA features cross-operating system capability: along with the widespread Windows systems, OPC UA also allows Linux-based systems or Apple computers with macOS*, for example, to be connected to the HEIDENHAIN control.

Numerous developer toolkits are available for OPC UA. RemoTools SDK is not needed. Thanks to the standardized protocol, the freedom to choose the toolkit, and the application-oriented HEIDENHAIN information model, highly individualized applications and standard software can be developed with significantly reduced time to market.

The HEIDENHAIN OPC UA NC Server supports the following OPC UA services:
- Reading and writing variables
- Interface for accessing tool data of the TNC 620
- Subscribing to value changes
- Executing methods
- Subscribing to events

With Sign&Encrypt, HEIDENHAIN ensures that even the standard solution provides state-of-the-art IT security:
- SecurityMode: Sign&Encrypt
- Cryptographic algorithm: Basic256Sha256 (recommended by the OPC Foundation) – X.509 Certificates
- User authentication through X.509 certificates

* Apple and macOS are trademarks of Apple Inc.

Mounting information
Clearances and mounting

Proper minimum clearance

When installing the control components and power modules, take note of the minimum spacing, space needed for servicing, and the appropriate length and location of the connecting cables as detailed in the Technical Manual of the TNC 620.

Mounting and electrical installation

Observe the following points during mounting and electrical connection:
- National regulations for low-voltage installations at the operating site of the machine or components
- National regulations regarding interference and noise immunity at the operating site of the machine or components
- National regulations regarding electrical safety and operating conditions at the operating site of the machine or components
- Specifications for the installation position
- Specifications of the Technical Manual

Degrees of protection

The following components fulfill the requirements for IP54 (dust protection and splash-proof protection):
- Display unit (when properly installed)
- Keyboard unit (when properly installed)
- Machine operating panel (when properly installed)
- Handwheel

All electric and electronic control components must be installed in an environment (e.g., electrical cabinet, housing) with an IP54 rating (dust and splash-proof protection) in order to fulfill the requirements of pollution degree 2. All components of the OEM operating panel must also have an IP54 rating, just like the HEIDENHAIN operating panel components.

Electromagnetic compatibility

Protect your equipment from interference by observing the rules and recommendations specified in the Technical Manual.

Intended place of operation

The devices comply with EN 50370-1 and EN 61800-3, and are intended for use in industrially zoned areas.

Likely sources of interference

Interference is produced by capacitive and inductive coupling into electrical conductors or into device connections. This is caused, for example, by:
- Strong magnetic fields from transformers or electric motors
- Relays, contactors, and solenoid valves
- High-frequency equipment, pulse equipment, and switch-mode power supplies
- Power lines and leads to the above equipment

Protective measures

- Ensure that the MC, CC, and signal lines are at least 20 cm away from interfering devices
- Minimum distance of 10 cm between MC, CC, and signal lines to cables carrying interfering signals (in metal cable ducts, a grounded separation wall suffices for decoupling)
- Shielding by means of closed, grounded metal enclosures (e.g., an electrical cabinet)
- Use equipotential bonding lines in accordance with the grounding diagram (comply with the Technical Manual of your control).
- Use only genuine HEIDENHAIN cables and connecting elements

Installation elevation

The maximum elevation for installation of HEIDENHAIN control components (MC, CC, PLB, MB, TE, BF, IPC, etc.) is 3000 m above sea level.

Key dimensions

Main computer

MC 8410

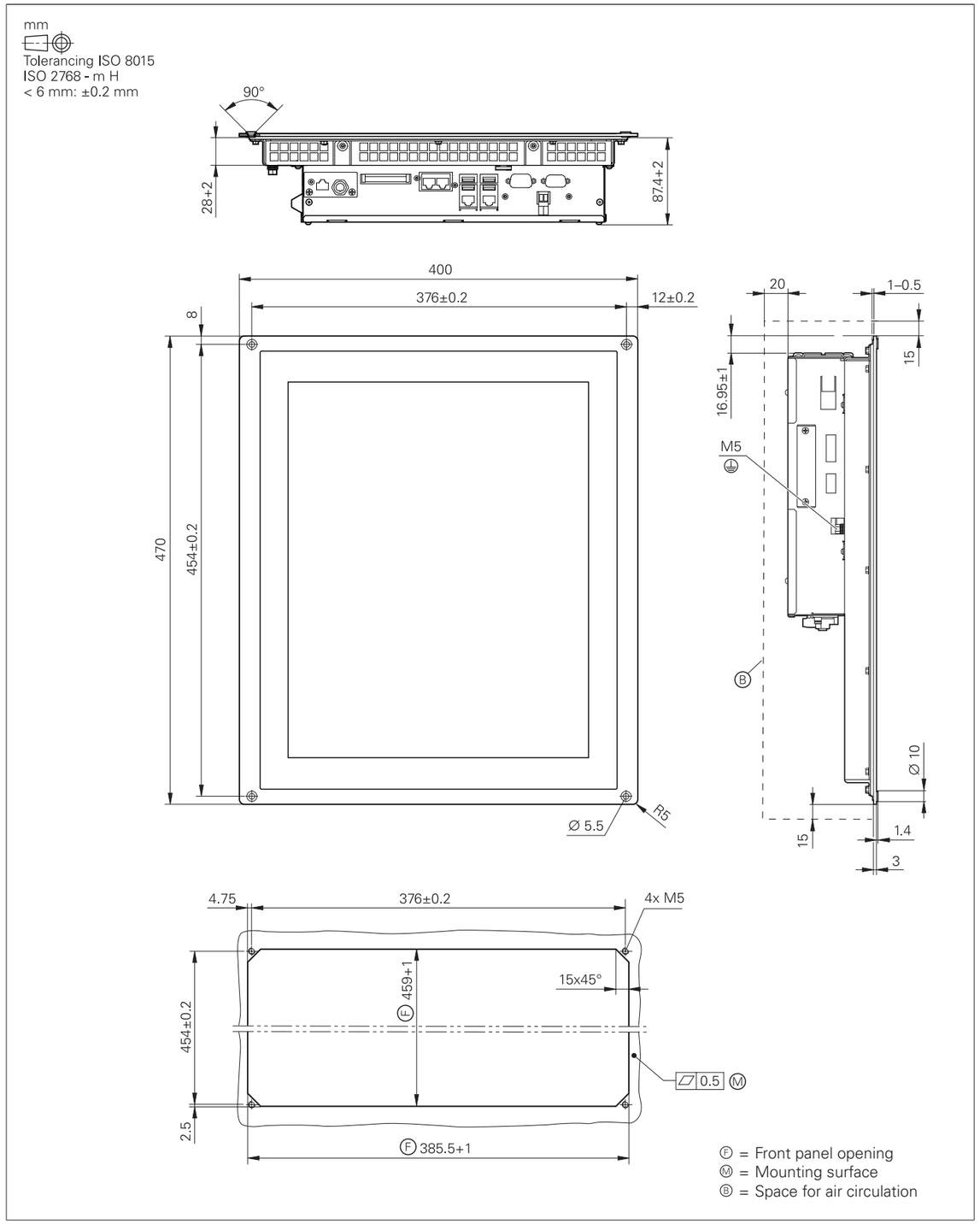

MC 8420

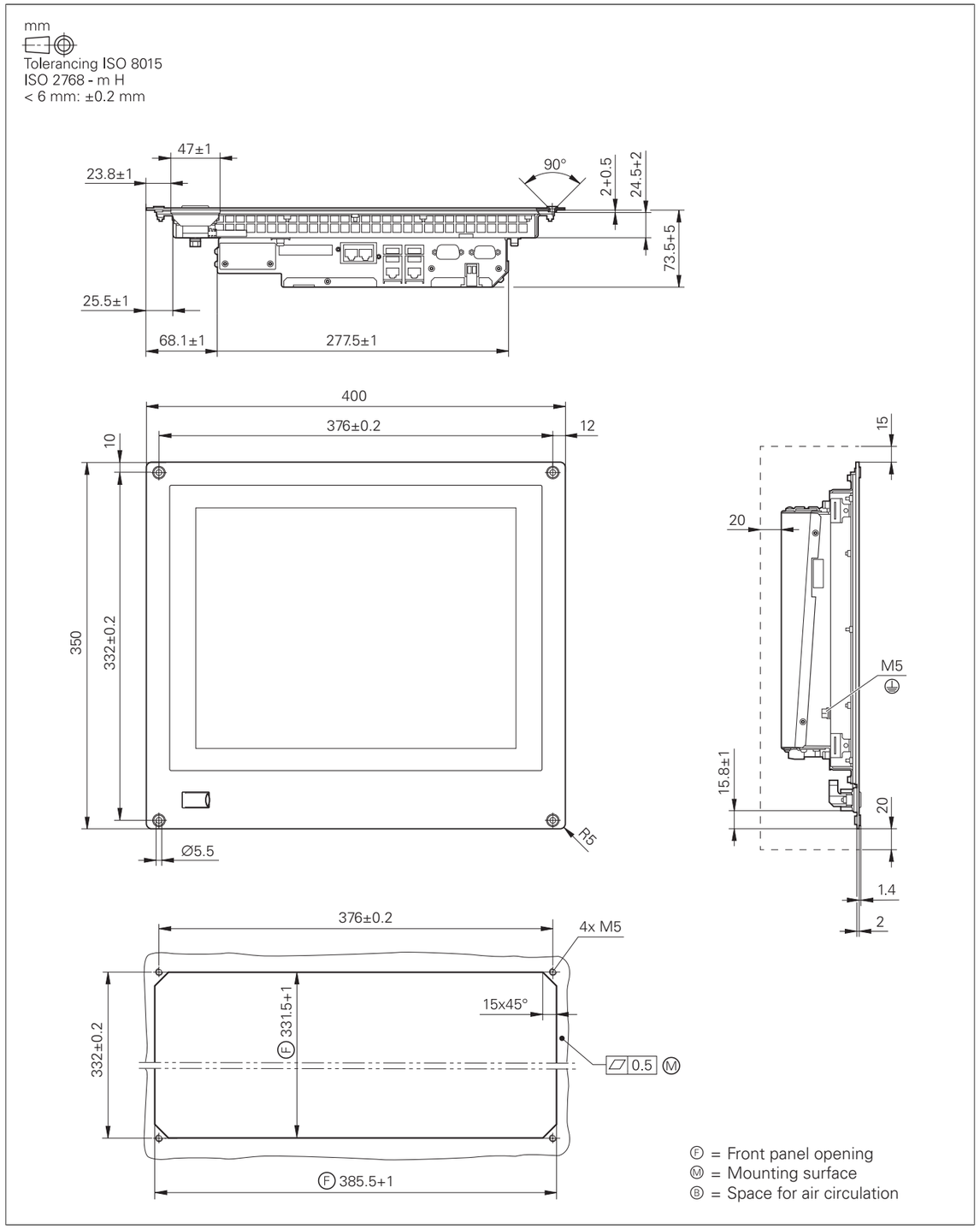

IPC 8420

mm

Tolerancing ISO 8015
ISO 2768 - m H
< 6 mm: ±0.2 mm

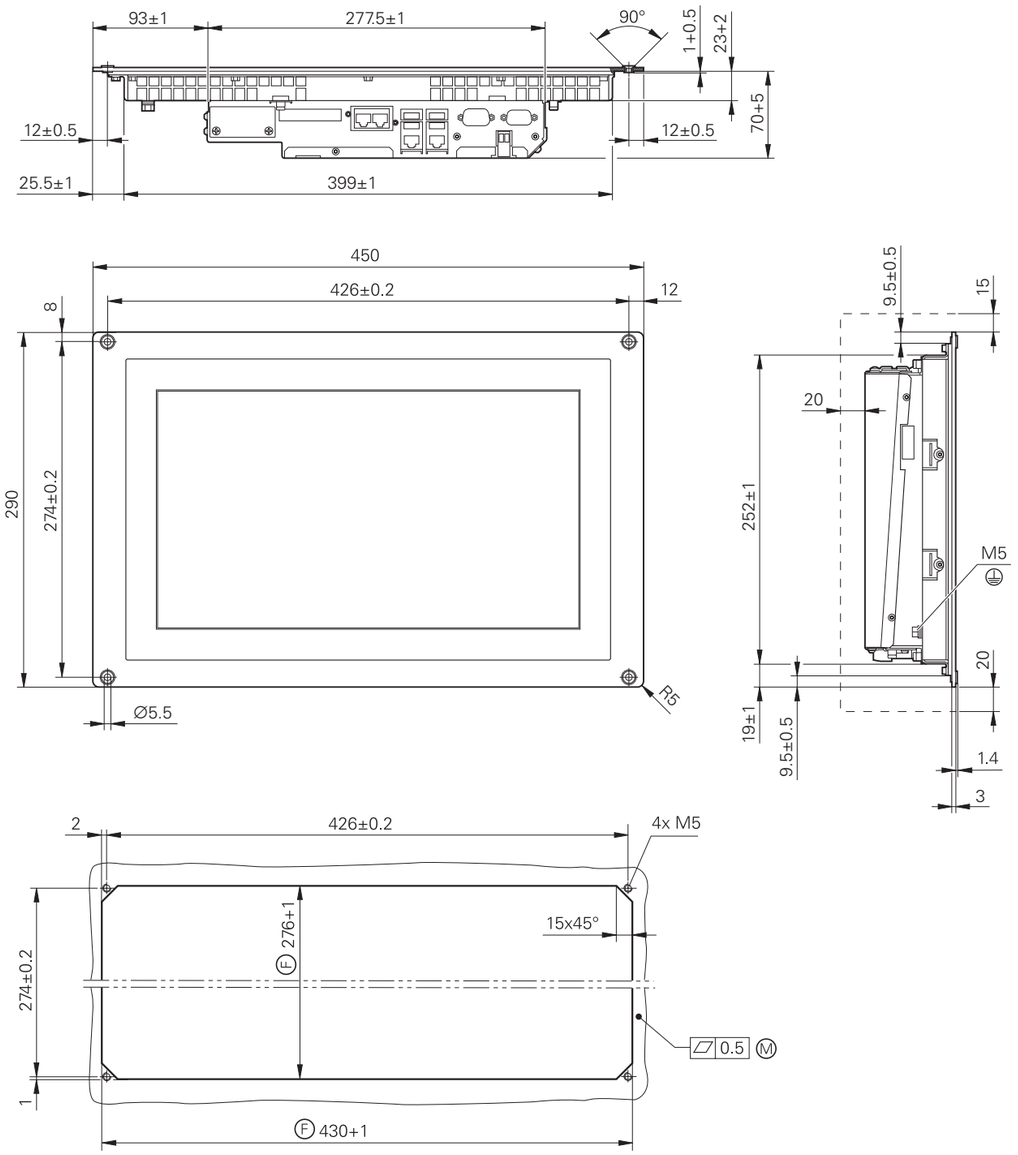

F = Front panel opening
M = Mounting surface
B = Space for air circulation

IPC 306

mm

Tolerancing ISO 8015
ISO 2768:1989-mH
≤ 6 mm: ±0.2 mm

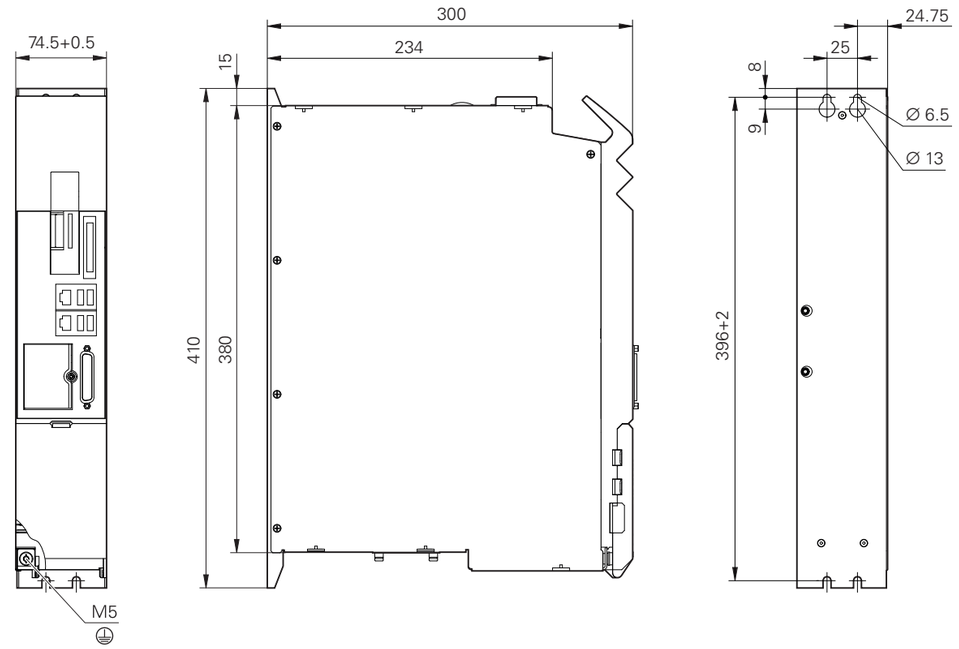

Operating panel, monitor, and keyboard

IPC 6490

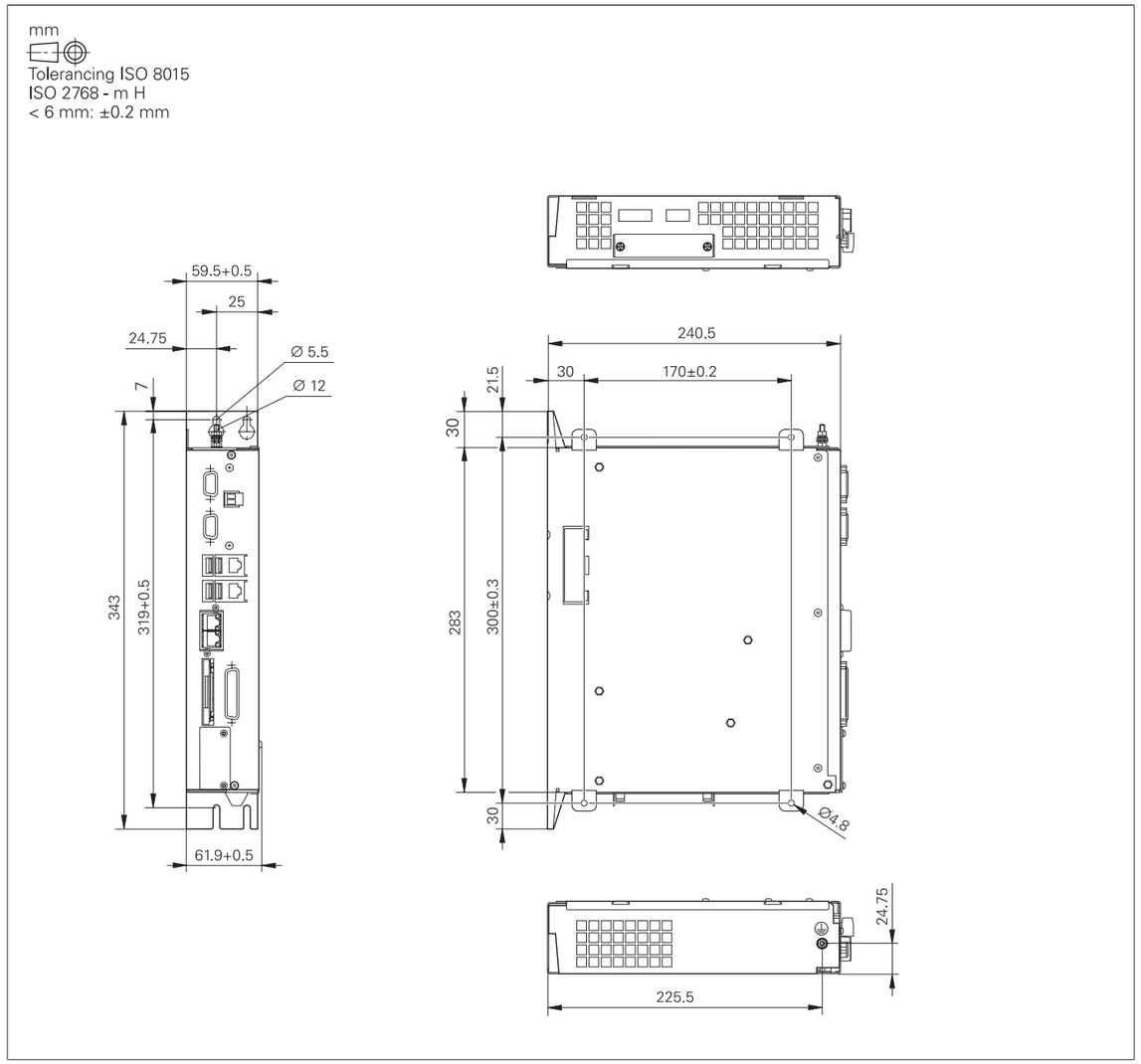

ITC 855

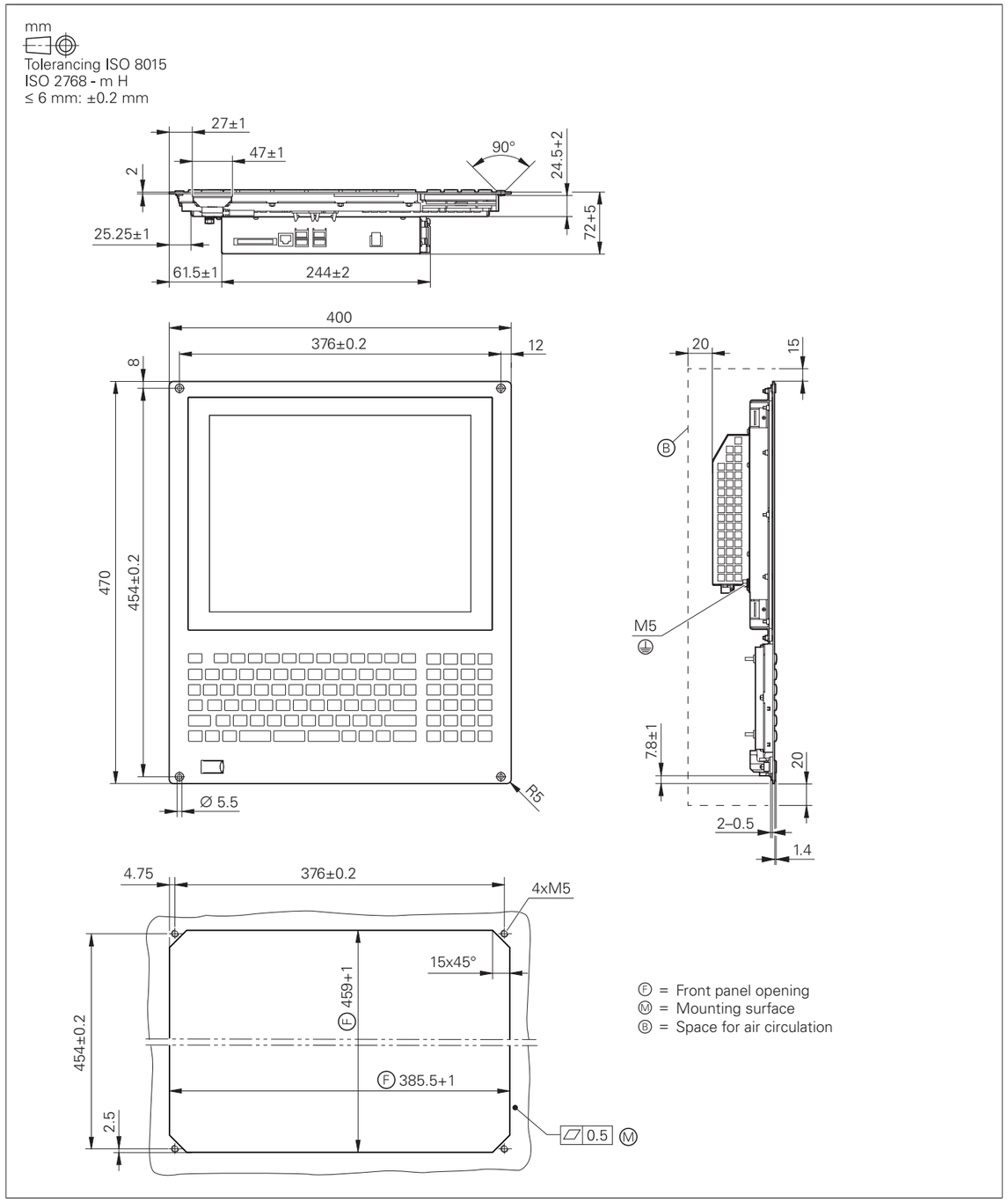

TE 730

mm

Tolerancing ISO 8015
ISO 2768 - m H
< 6 mm: ±0.2 mm

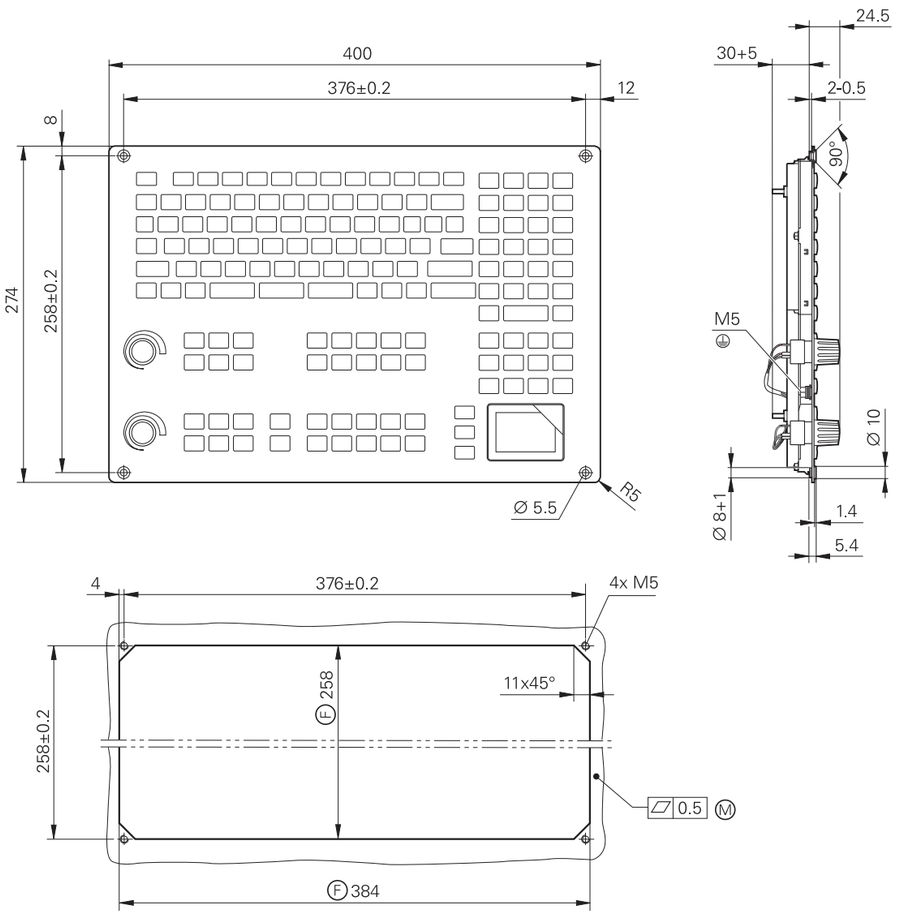

Ⓕ = Front panel opening
Ⓜ = Mounting surface

TE 735, TE 735 FS

mm

Tolerancing ISO 8015
ISO 2768 - m H
< 6 mm: ±0.2 mm

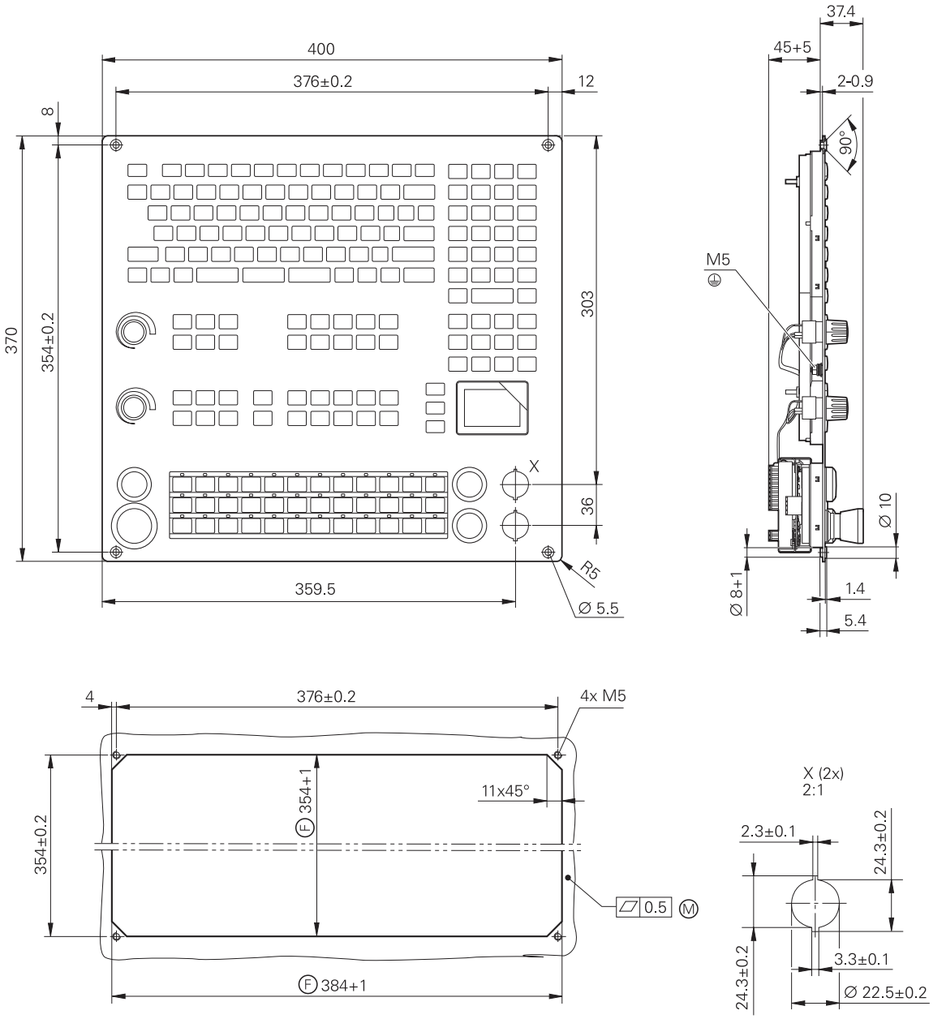

Ⓕ = Front panel opening
Ⓜ = Mounting surface

MB 720, MB 720 FS

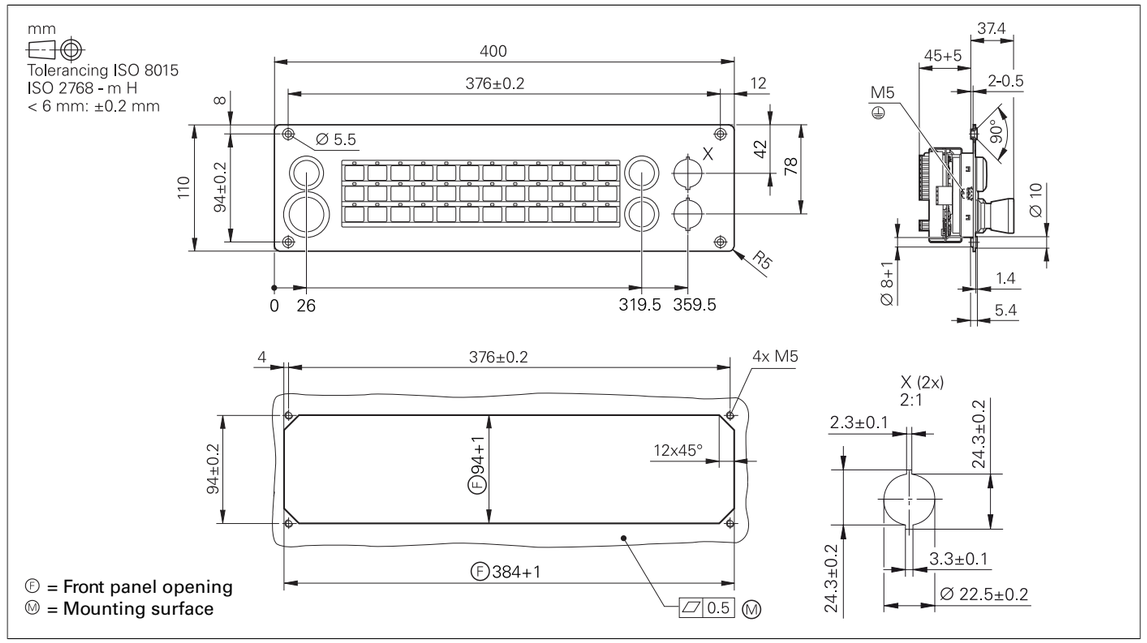

MB 721, MB 721 FS

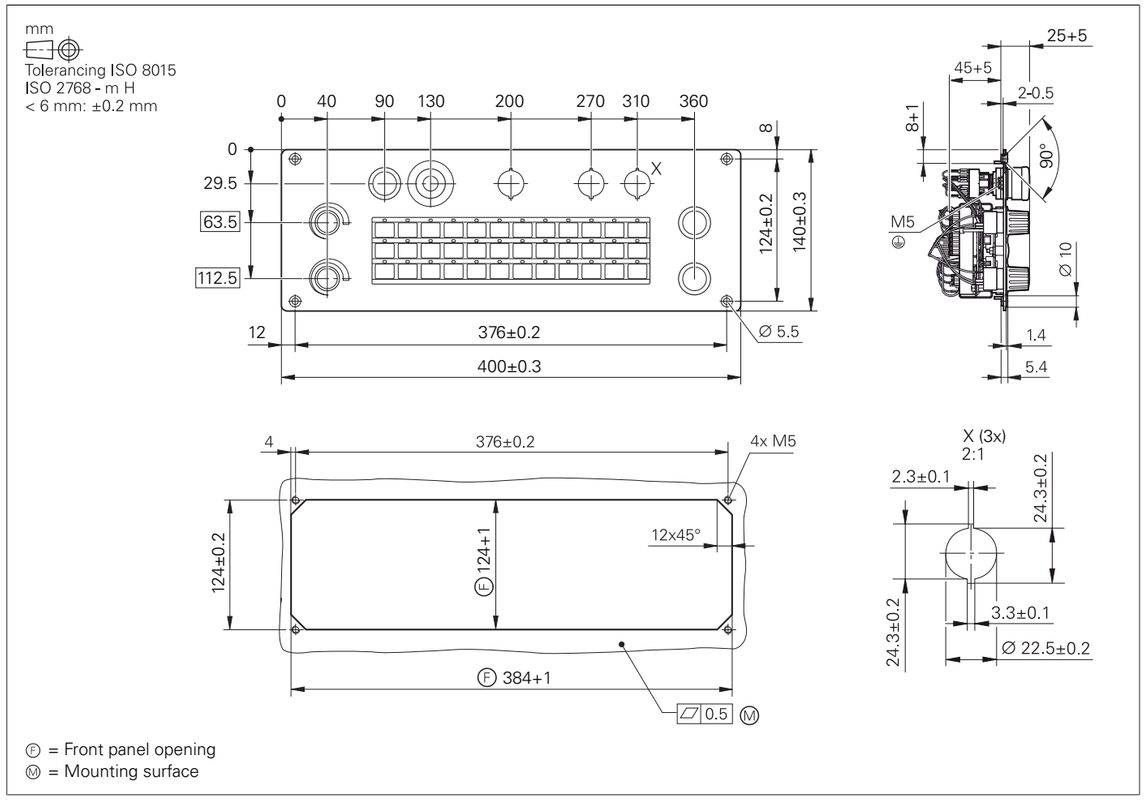

PLB 6001, PLB 600x FS

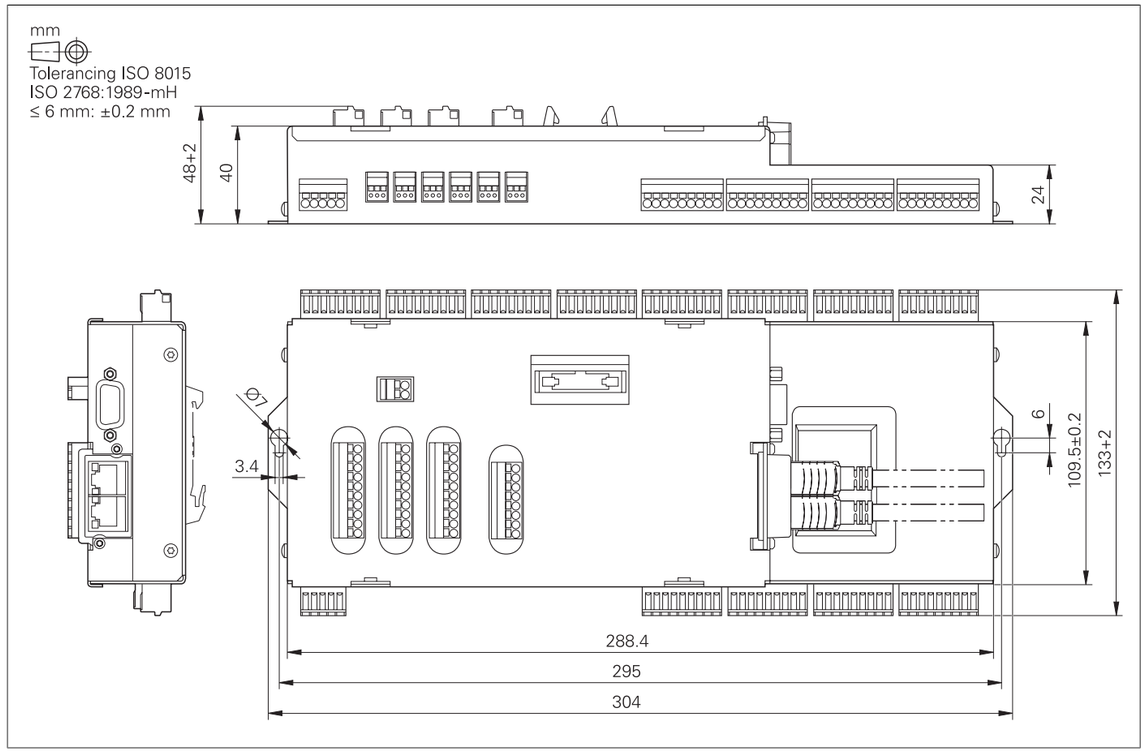

PL 6000 (PLB 62xx, PLB 61xx)

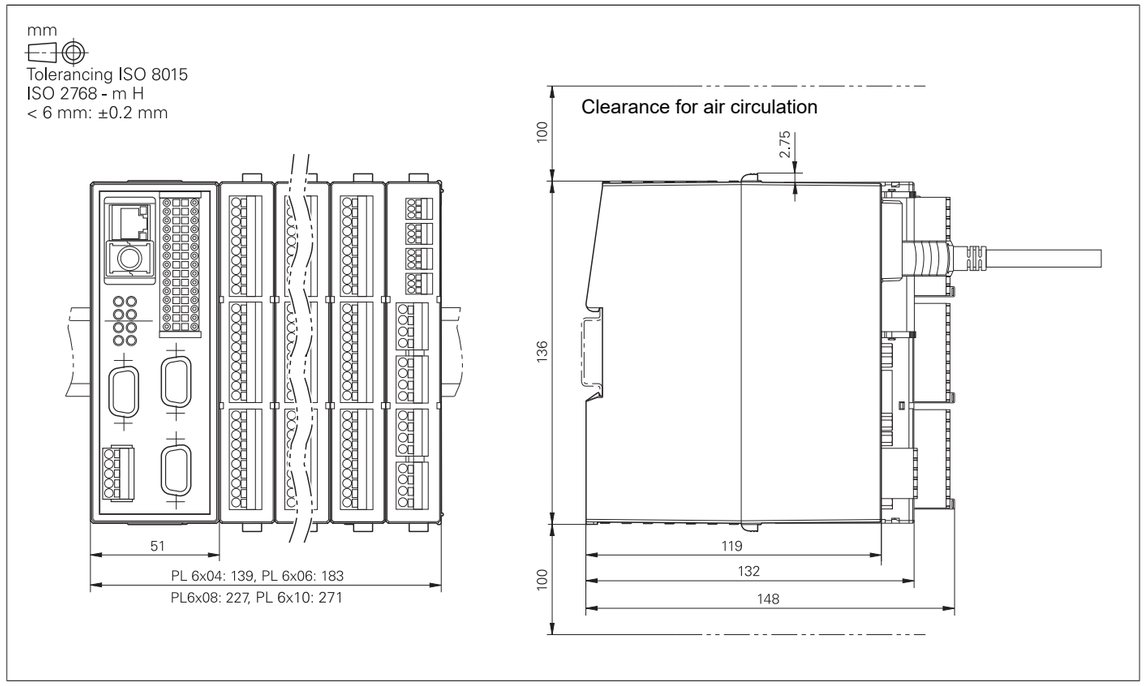

Electronic handwheels

HR 510, HR 510 FS

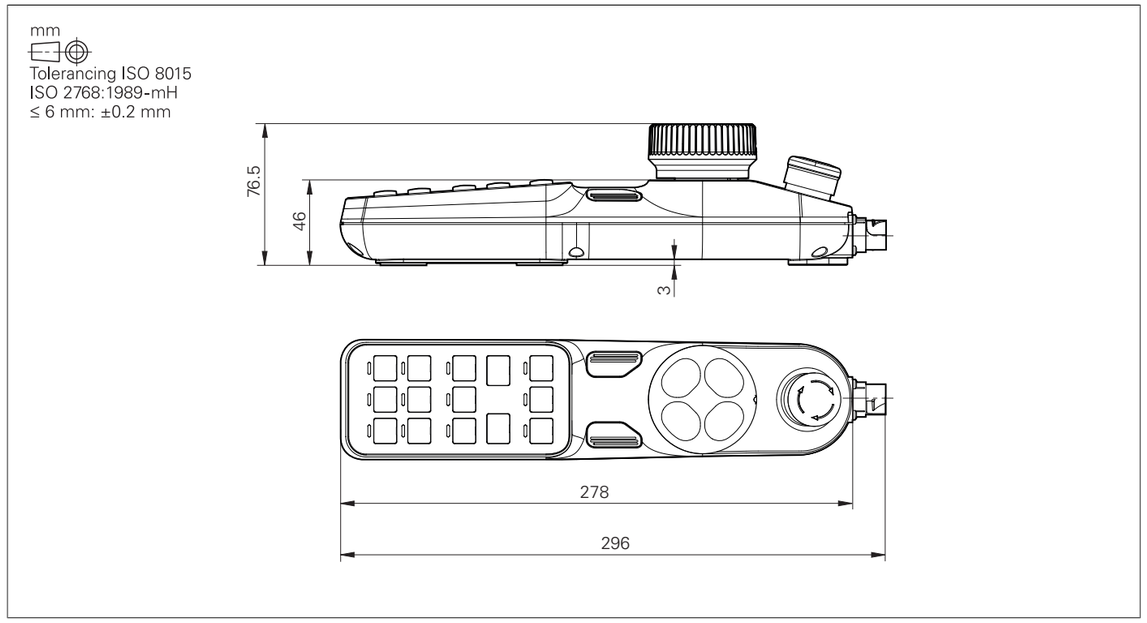

HR 520, HR 520 FS

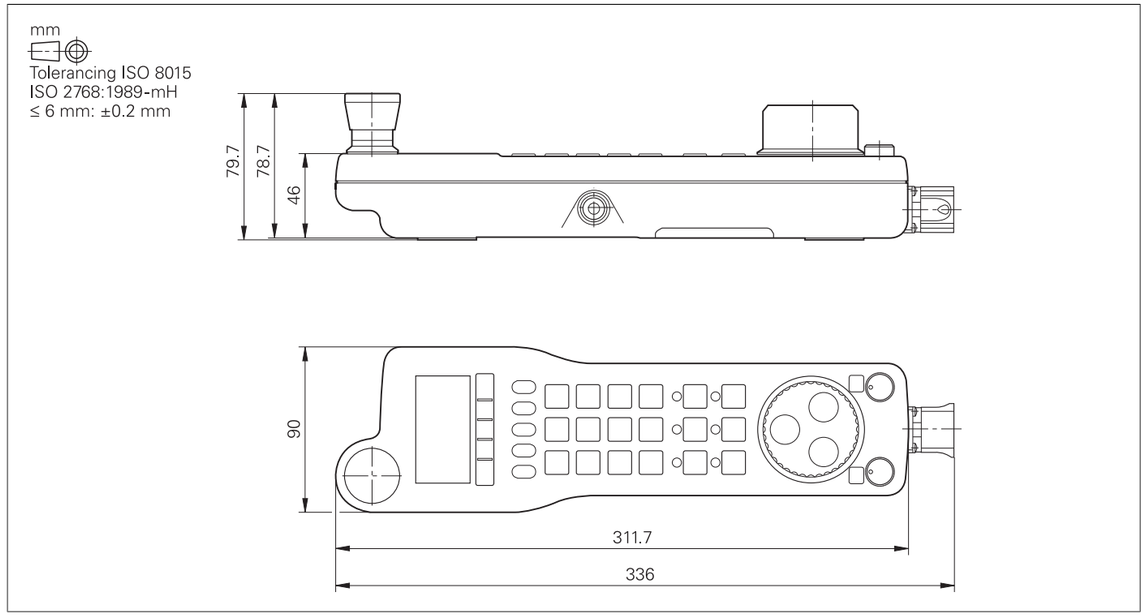

Holder for HR 520, HR 520 FS

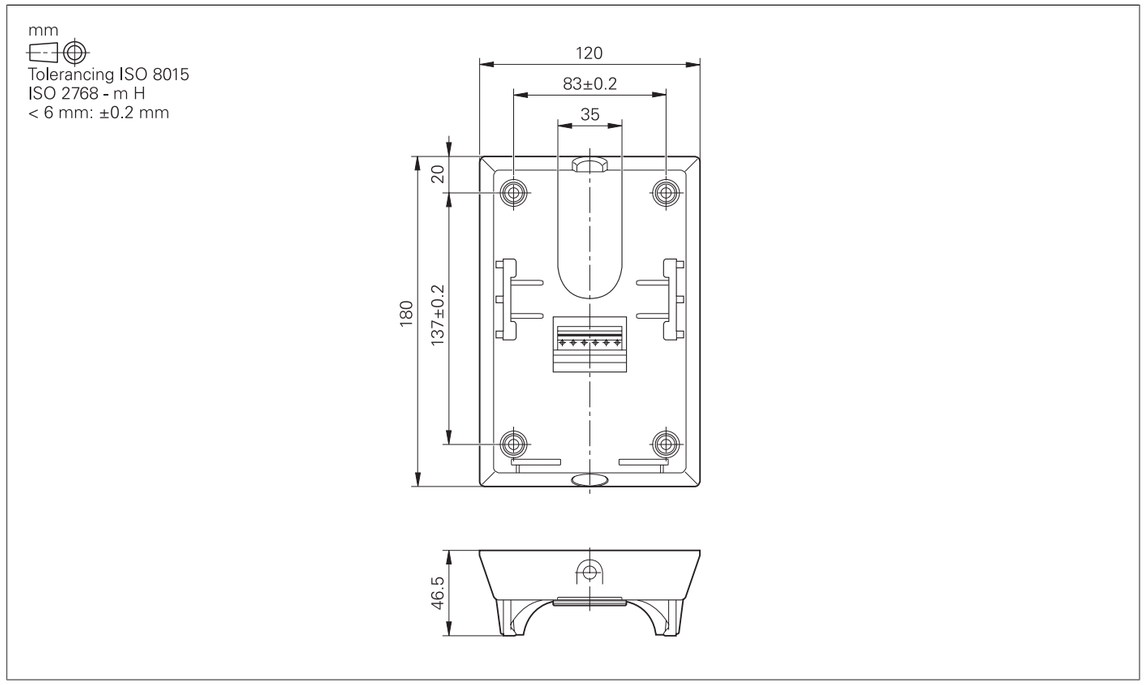

HR 550 FS

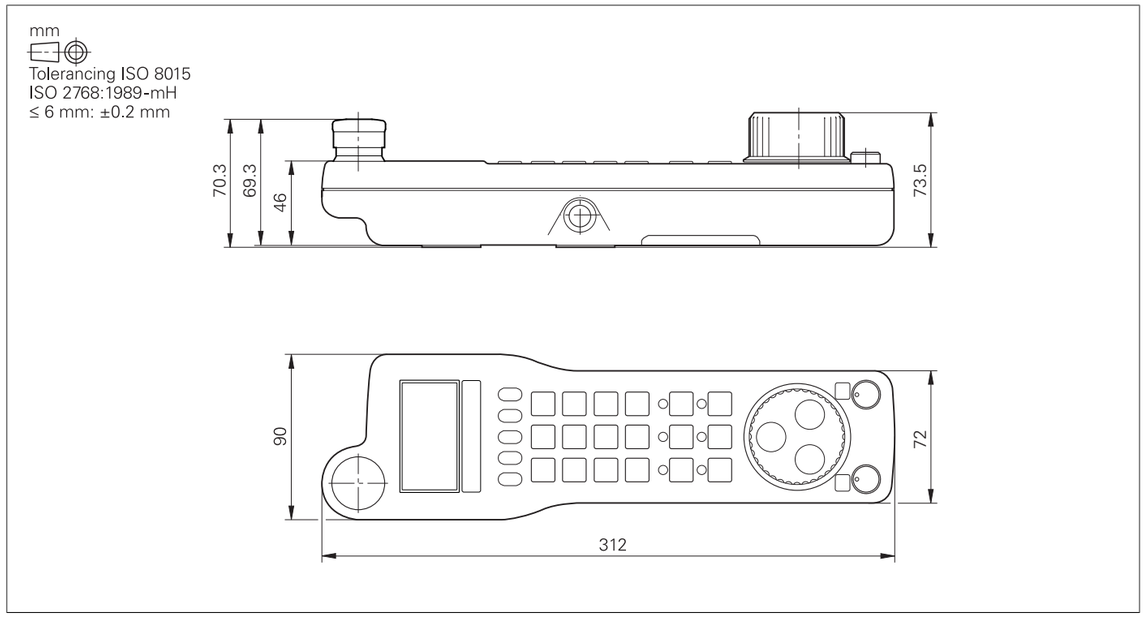

HRA 551 FS

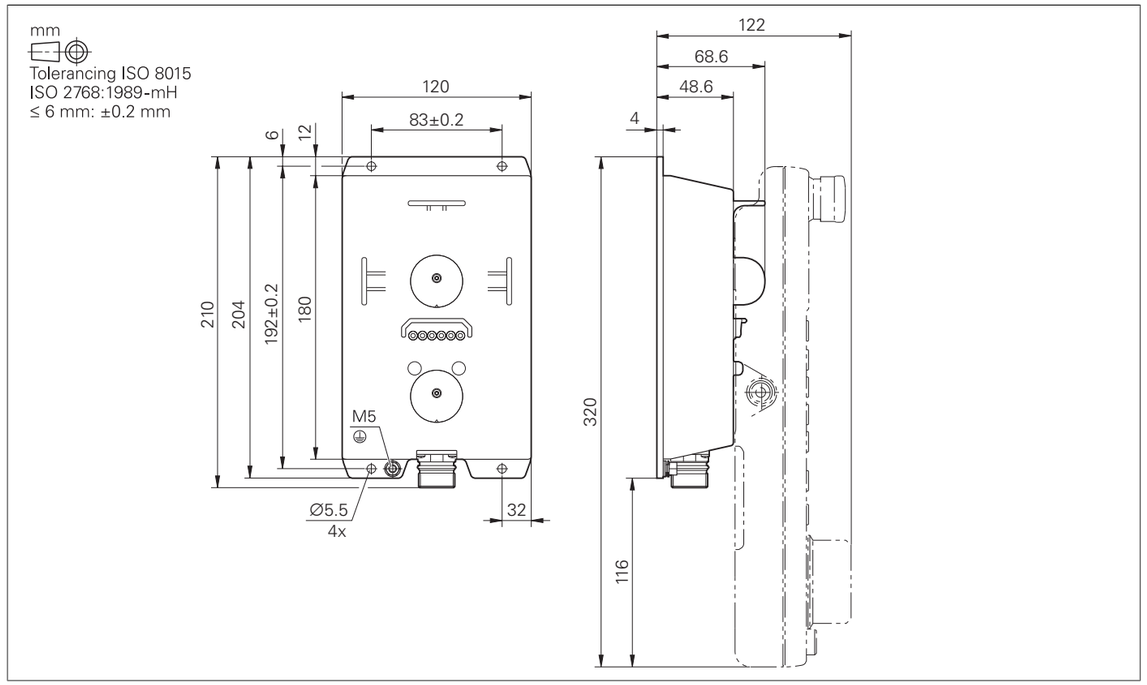

HR 130, HR 180

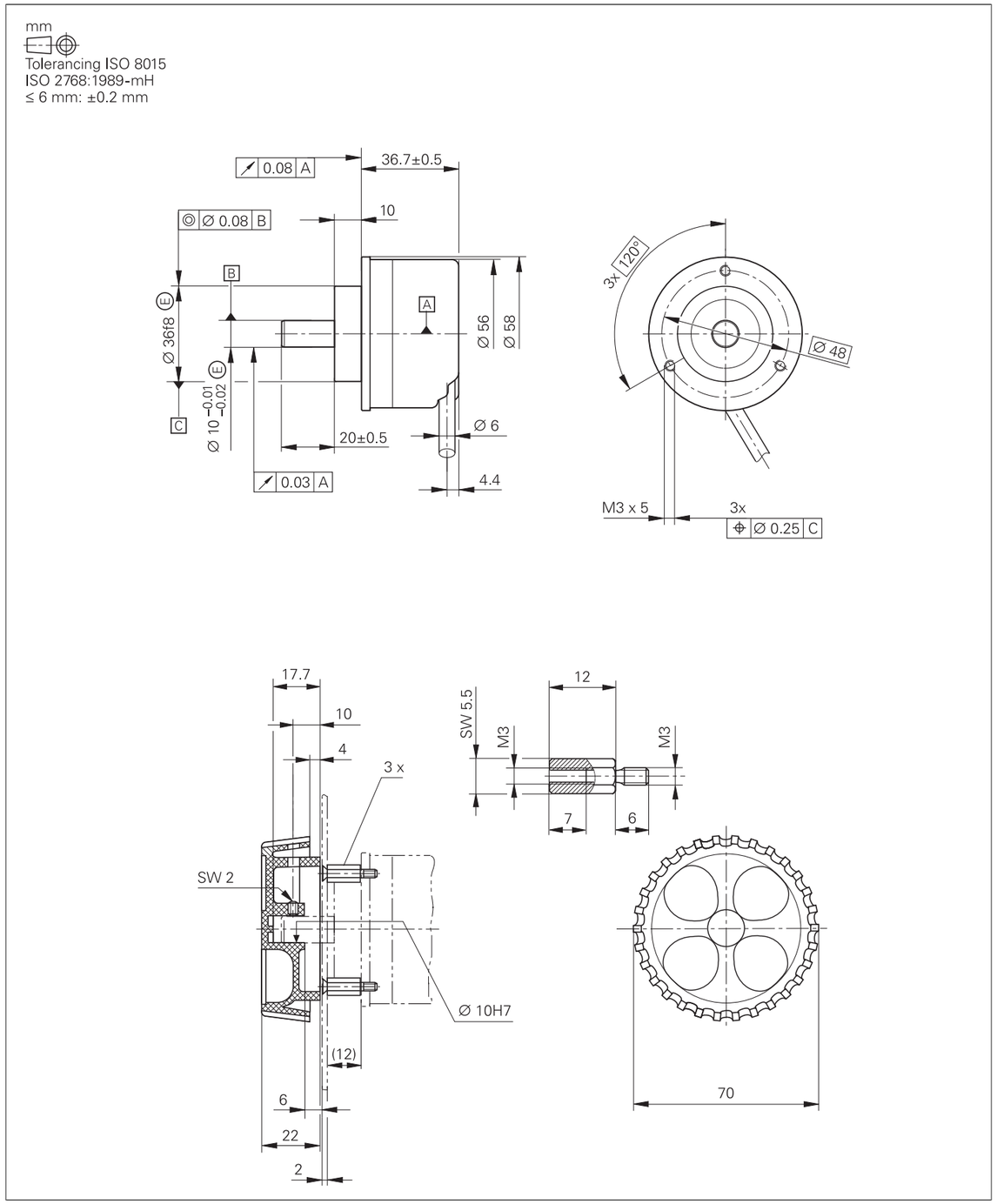

HRA 180

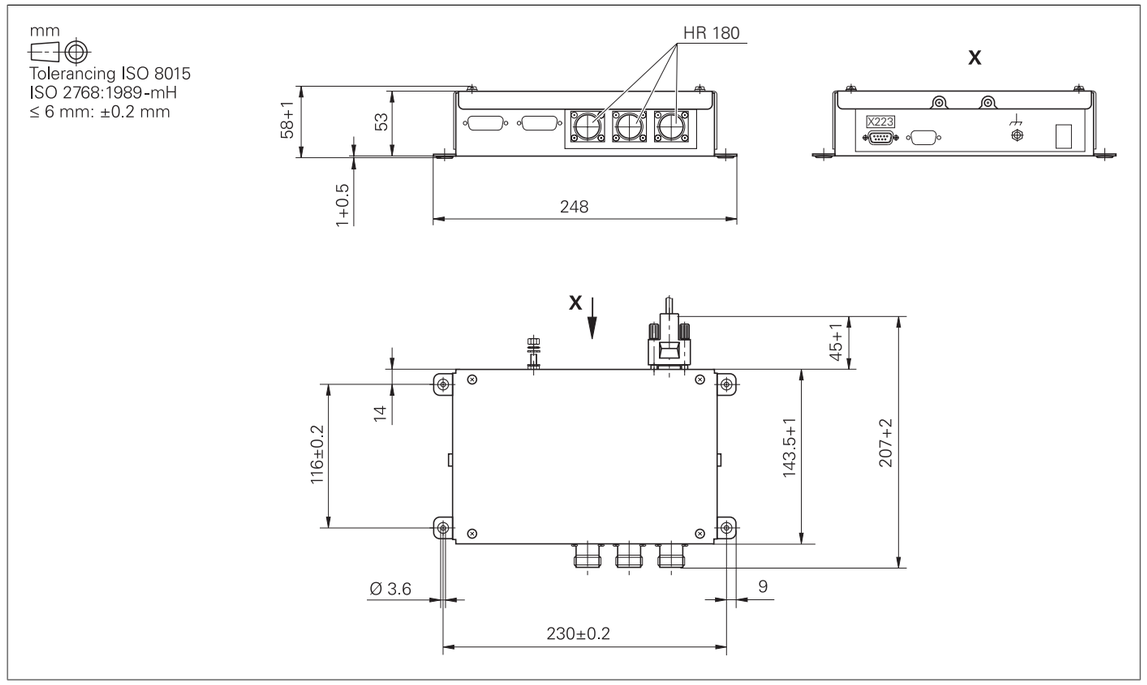

Adapter cable for handwheels (straight)

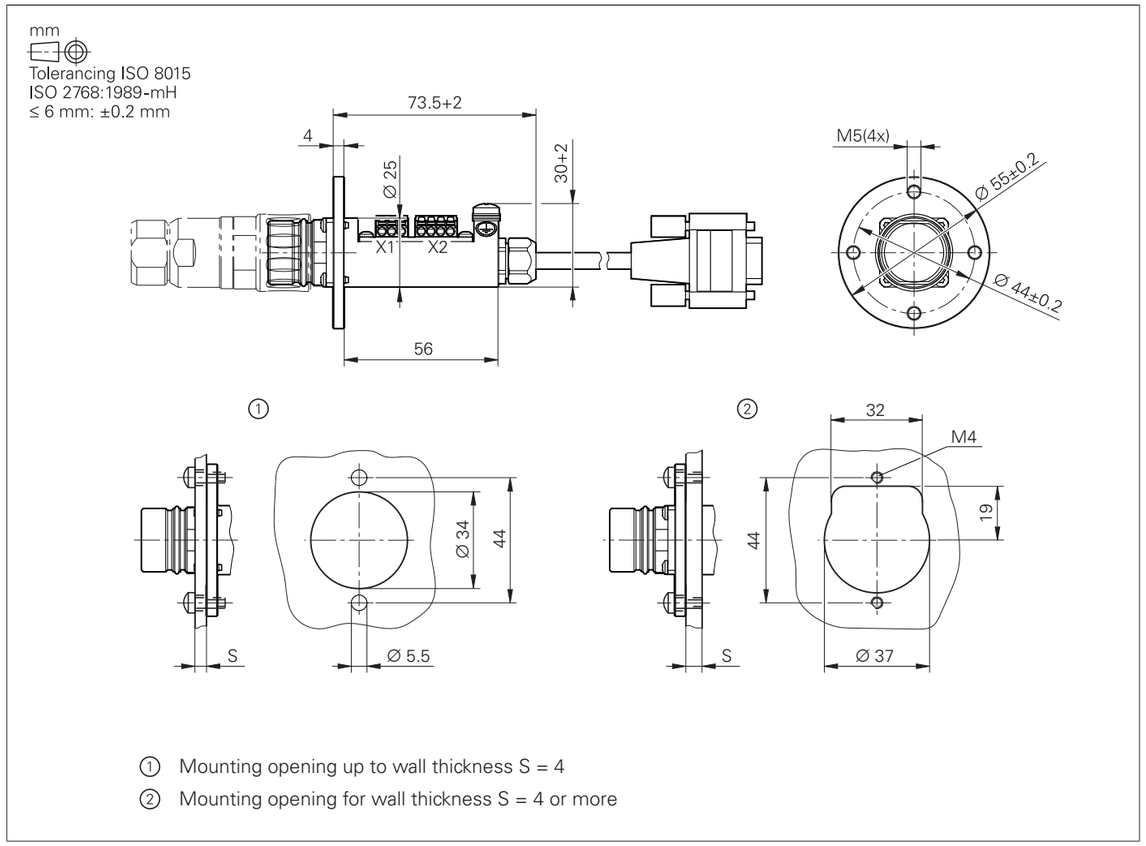

① Mounting opening up to wall thickness S = 4
② Mounting opening for wall thickness S = 4 or more

HR/HRA adapter cable to MC (straight connector)

Adapter cable for handwheels (angled)

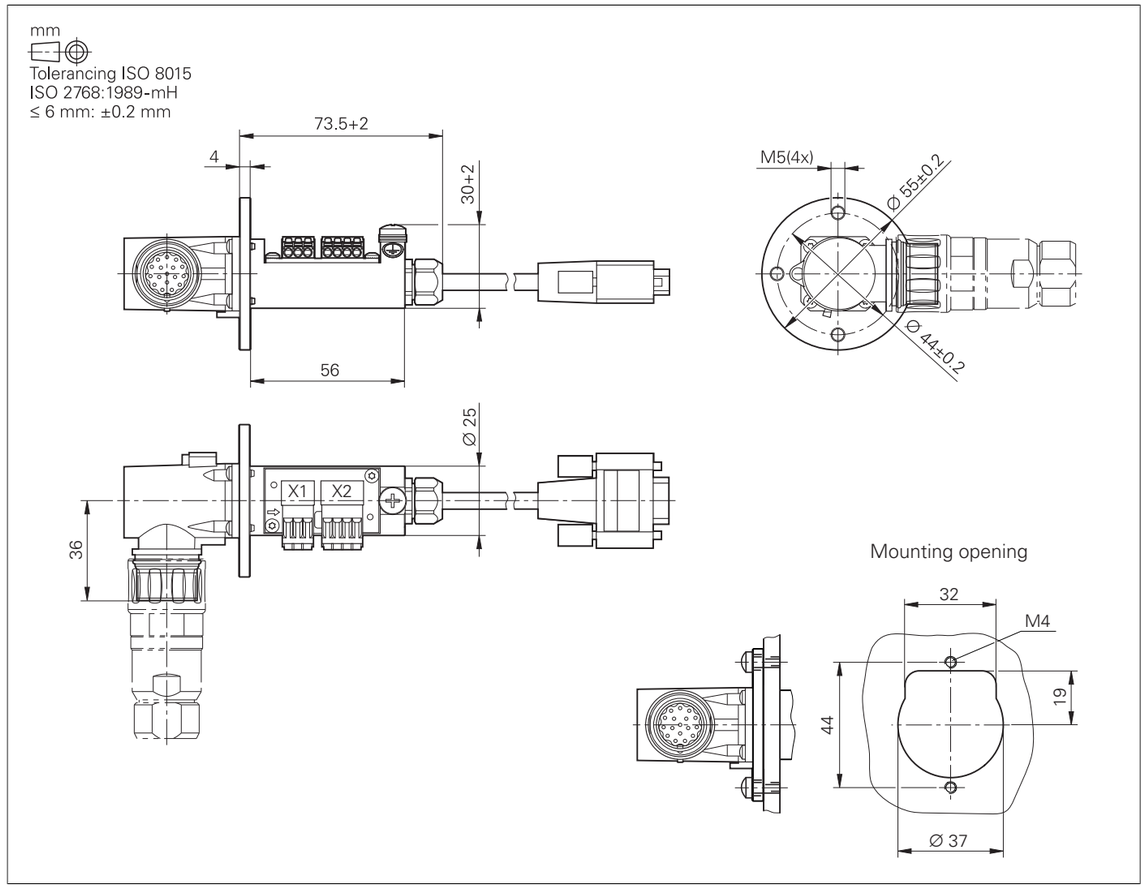

Adapter cable for HR/HRA to MC (angled connector)

Line-drop compensator for encoders with EnDat interface

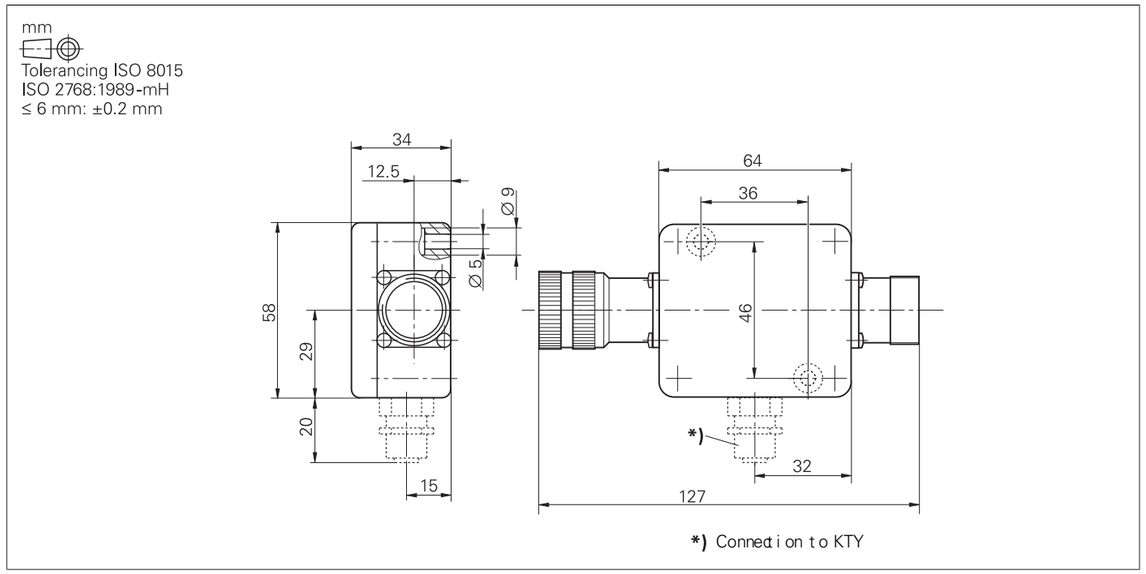

USB extension cable with hubs

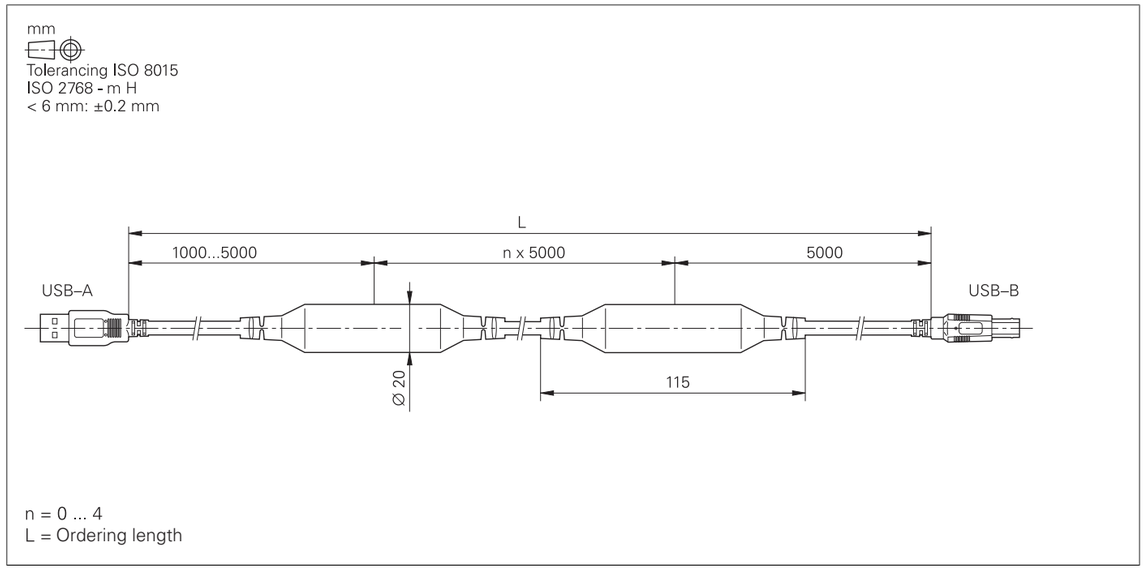

KTY adapter connector

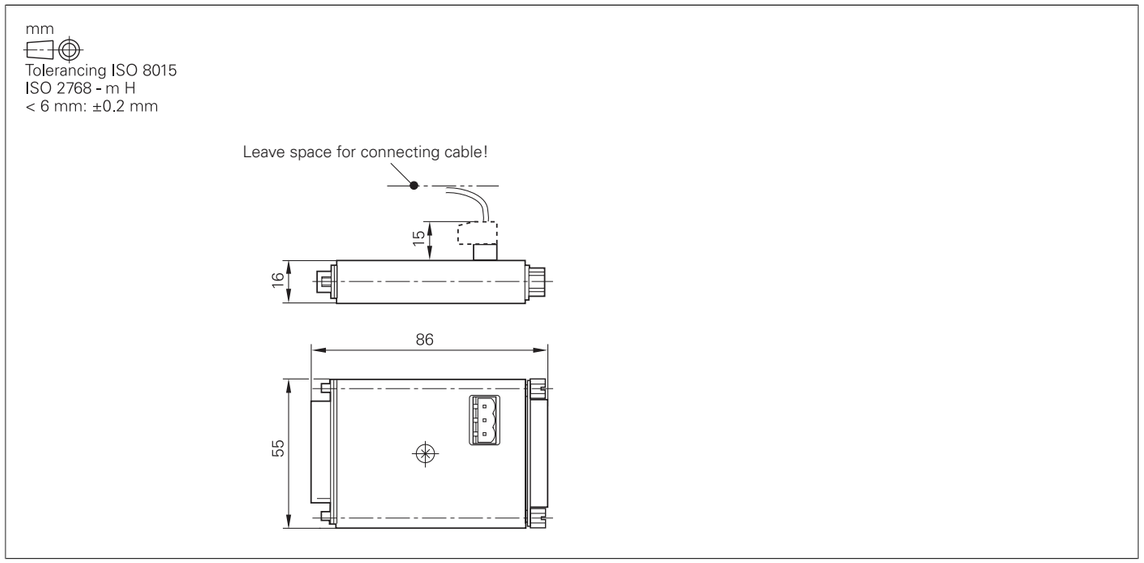

General information

Documentation

Technical documentation

Technical Manuals
(PDF format on HESIS-Web including Filebase)

• TNC 620	ID 1098989
• PNC 610	ID 1191125
• Inverter Systems for Gen 3 Drives	ID 1252650
• Functional Safety (FS)	ID 749363
• Functional Safety (FS) Supplement to the Technical Manual	ID 1423840
• Python in HEIDENHAIN Controls	ID 757807
• OPC UA NC Server	ID 1309365
• Motors	ID 1296230
• Control Components	ID 1418899

User documentation

User's Manuals

TNC 620:

• Klartext Programming	ID 1096883-xx
• Setup, Testing, and Running NC Programs	ID 1263172-xx
• Programming of Machining Cycles	ID 1303427-xx
• Programming of Measuring Cycles for Workpieces and Tools	ID 1303431-xx
• ISO Programming	ID 1096887-xx

General:

• TNCremo	Integrated help
• TNCremoPlus	Integrated help
• PLCdesign	Integrated help
• CycleDesign	Integrated help
• IOconfig	Integrated help
• KinematicsDesign	Integrated help

Other documentation

Brochures

• TNC 620	ID 896140-xx
• Touch Probes	ID 1113984-xx
• Inverter Systems for Gen 3 Drives	ID 1303180-xx
• Motors	ID 208893-xx
• RemoTools SDK virtualTNC	ID 628968-xx
• Options and Accessories for TNC Controls	ID 827222-xx

Booklets

• HR 550 FS	ID 636227-xx
• OPC UA NC Server	ID 1355797-xx

Programming station

To find the programming station software, drivers for the software security module (USB dongle) and the related documentation, visit the Downloads area of the HEIDENHAIN website.

Without the software security module (USB dongle), the programming station software runs as a demo version (with limitations).

For more information, please ask your contact person at HEIDENHAIN.

Brochure

• Programming Station for TNC Controls	ID 825930-xx

Safety parameters

The safety parameters must be calculated for every machine (e.g., as per EN ISO 13849-1), with the assemblies being used taken into account. HEIDENHAIN provides relevant documents containing the failure rates.

Registered customers will find the safety parameters for the Gen 3 drives with external and built-in functional safety (FS) in the HESIS including Filebase.

Non-registered customers will recieve the documents upon request from their HEIDENHAIN contact persons. Documents for older inverter systems are available only upon request.

The following documents can be downloaded via the Filebase:

Document	ID
System Description and Failure Rates – Supplement to the Technical Manuel – Gen 3 Drives – PFH values for controls	1312624
System Description and Failure Rates – Supplement to the Technical Manual – MTTF values for emergency stop buttons and permissive buttons	815683
System Description and Failure Rates – Supplement to the Technical Manual – Failure rates of HEIDENHAIN motors	1029960

Basic circuit diagram

More information on basic circuit diagrams can be requested from your HEIDENHAIN contact person.

Subject index

Subject index

HEIDENHAIN

Mastering nanometer accuracy

HEIDENHAIN

DR. JOHANNES HEIDENHAIN GmbH
Dr.-Johannes-Heidenhain-Straße 5
83301 Traunreut, Germany
☏ +49 8669 31-0
FAX +49 8669 32-5061
info@heidenhain.de

www.heidenhain.com

HEIDENHAIN worldwide

895922-2D · 06/2024 · H · Printed in Germany